WARMAN®
Centrifugal Slurry Pumps

GSL

Excellent
Minerals
Solutions

WEIR MINERALS

The Warman® GSL's high performance design combines the L pump's best features with the latest materials and hydraulic design developments.

Over a quarter century in FGD

Since the introduction of the first Flue Gas Desulphurization (FGD) systems in the 1970s for reducing power station emissions, Weir Minerals has led the world in the supply of more than 4,000 specially designed FGD pumps.

In the beginning, the robust Warman AH slurry pumps, fitted with replaceable rubber liners were a good match for the high head, low flow, corrosive slurry duties.

With the change in the duty conditions of the Absorber Recirculation pumps to lower heads and larger flows in the late '70s, Weir Minerals responded by developing the Warman L pump, which quickly became the industry standard.

Weir Minerals has continually improved the performance of the L pumps through the introduction of high efficiency impellers, improved pump liner elastomers, special alloys and high capacity bearing assemblies.

Designed for latest FGD technology

Recent trends in the technology of FGD systems have called for even higher flow capacity in order to reduce installation cost and optimize efficiency.

Weir Minerals, realizing that modern absorber technology would require new and innovative pump designs, conducted a world-wide study of customers' future requirements for Absorber Recycle pumps and compiled a list of innovations that profiled the new generation of Warman GSL pumps.

New high performance design

The results of this exercise culminated in the new high performance GSL pump that combined the features of the L pump, the benchmark for pumps worldwide, with the latest materials, modern manufacturing methods and hydraulic design developments.

New advancements in elastomer technology make the liners highly resistant to vacuum and tearing along with providing the ultimate in wear and corrosion resistance.

The GSL pumps are designed to be either direct coupled to slow speed electric motors or directly driven through gearboxes.

Warman GSL pumps represent experience-based computer design, low operating costs, long wear life, easy maintenance, and low ownership costs

Lowest cost of operation

Power consumption is by far the largest component of operative costs. Being able to maintain the efficiency throughout the life of the impeller guarantees the lowest overall operating costs.

GSL pumps have the highest efficiencies in the industry achievable throughout the life of the impeller. The GSL pumps were designed to achieve in excess of 90% in the best efficiency area.

The 1000TY GSL pump incorporates the newest molding technology using a continuous FRP support shell along with internal steel stiffening to support the thick rubber liners. This provides an extra support base to resist vacuum and provide longer life to the liners.

Warman GSL quick selection chart

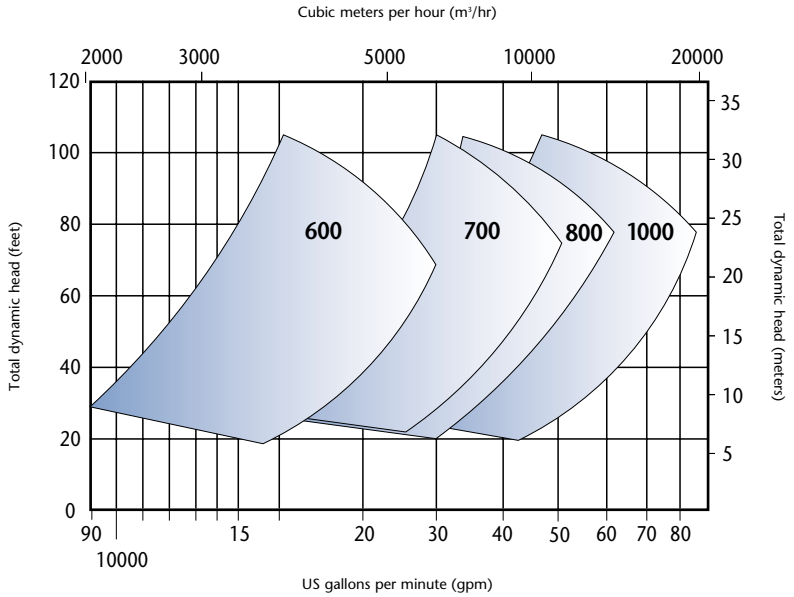

The Warman brand is a world leader with over a quarter century of experience in FGD.

Designed for easy maintenance, durability and the latest FGD technology

Easy maintenance

Back pull out design – Minimum number of larger diameter fasteners allows all rotating and wearing components, including the mechanical seal, to be inspected without disturbing the suction or discharge pipework.

Modular design bearing cartridge – Allows simple removal of the entire assembly for maintenance in a clean environment. Split release collar fitted on bearing side of the shaft sleeve making impeller removal fast and simple.

Long wear life – Specifically designed for handling abrasive and corrosive conditions found in FGD applications, the GSL design fully utilizes Weir Minerals' long experience in solids pumping and FGD with a design built to last.

Lower corrosion in impellers – Specially formulated high chromium irons, developed in Weir Minerals' material technology laboratories, combined with optimum impeller vane designs minimize wear in the pumps.

No corrosion in liners – Natural rubber liners are corrosion proof against acidic limestone/gypsum slurries, avoiding corrosion risks which can plague metal lined pumps, particularly when low pH slurries are left within the pumps when not operating.

Long bearing and mechanical seal life – A large diameter, very stiff shaft and short impeller overhand minimizes shaft deflection and so provides excellent conditions for the mechanical seal. Fully protected oversized heavy duty oil lubricated roller and taper roller bearings carry all the radial and thrust loads with unusually high service factors.

Materials of construction

Liner
Natural rubber (R38)
Natural rubber (R55)
Neoprene (S42)
Natural rubber (R45)

Throatbrush
Ultrachrome (A49)
Ultrachrome (A51)
Ceramic (P310)

Impeller
Ultrachrome (A49)
Ultrachrome (A52)
Ceramic (P310)

Cover plate & frame plate
SG iron (D21)

Shaft sleeve
CD-4MCu (C26)
Hastalloy (N04)

Shaft
Carbon steel (E05)
Carbon steel (E22)

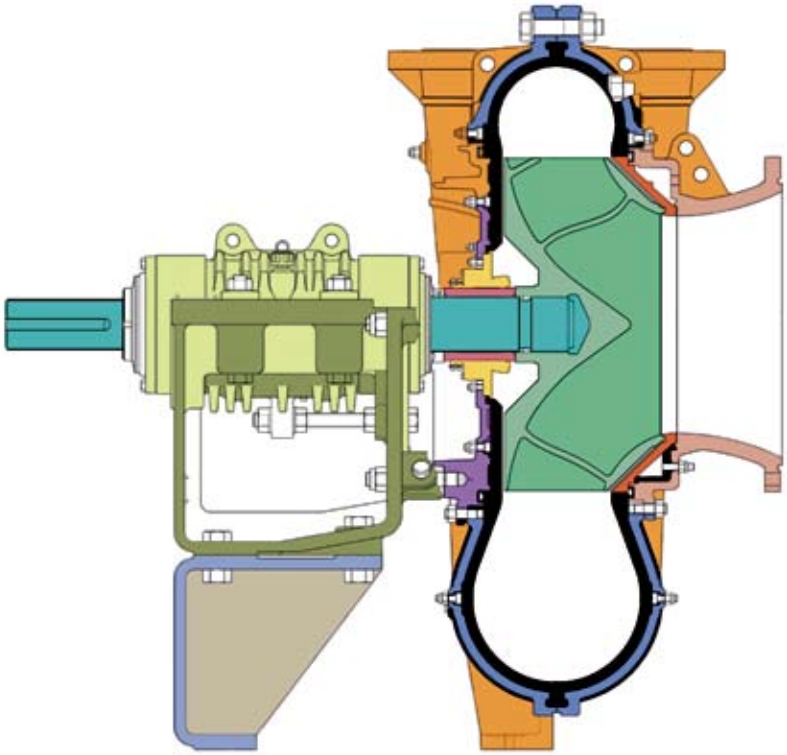

As world leader, Weir Minerals supports GSL pump customers through a network of manufacturing facilities on four continents and with sales offices, licensees and agents in 73 countries, providing superior products and support through professional customer service.

Warman GSL pump dimensions

Pump size	Base dimensions A	B	C1	C2	D	E1	E2	F	H1	H2	Shaft øJ	K	KEY	L1	L2	Hold down bolt holes	Mass (kg) pump
600SY GSL	1841	960	850	850	670	110	50	655	35	40	120.3/120.01	284	32 x 18	330	610	039	4575
700TY GSL	2363	1300	1100	1100	875	130	75	835	40	45	150.04/150.01	355	36 x 20	375	720	051	7280
800TY GSL	2383	1300	1100	1100	885	130	75	845	40	45	150.04/150.01	355	36 x 20	500	800	051	8300
1000TY GSL	2570	1800	1600	1100	890	135	75	1025	40	50	150.04/150.01	355	36 x 20	470	930	060	12360

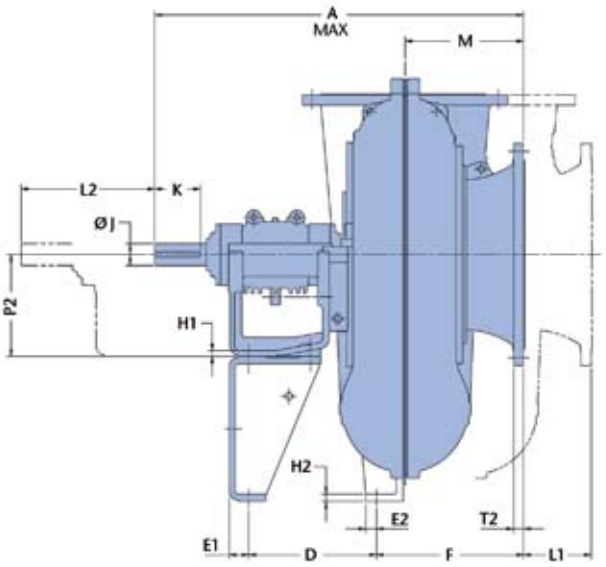

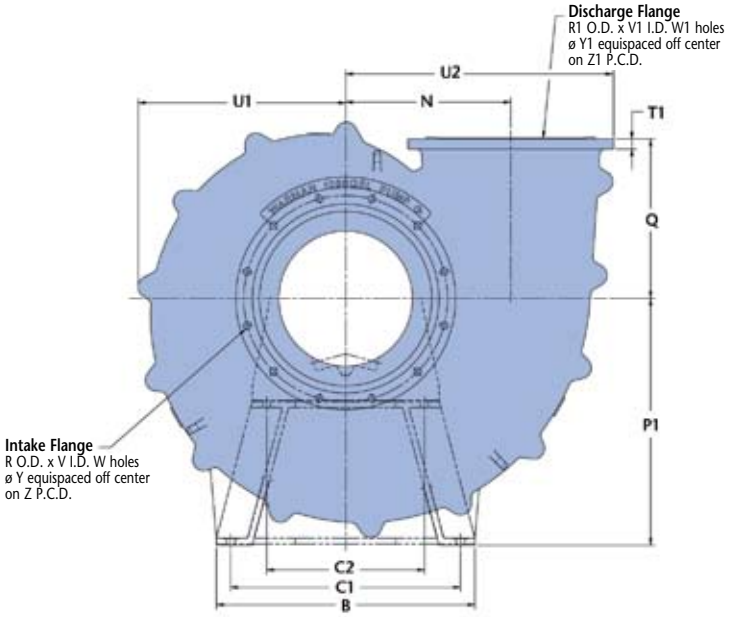

Pump size	Head dimensions M	N	P1	P2	Q	T1	T2	U1	U2	Intake R	V	W (qty)	Y	Z	Discharge R1	V1	W1 (qty)	Y1	Z1
600SY GSL	525	680	1050	500	675	45	40	901	1136	895	700	12	33	830	850	600	12	33	755
700TY GSL	680	870	1290	700	830	55	48	1123	1402	1015	800	12	39	940	1020	700	12	39	925
800TY GSL	670	930	1400	700	900	55	55	1218	1538	1170	900	12	45	1080	1140	800	12	45	1045
1000TY GSL	825	1150	1700	700	1100	70	70	1445	1865	1540	1200	12	60	1270	1420	1000	12	60	1300

Note: All values are in millimeters (mm) except where noted

Worldwide technical support

Wherever end users, constructors, or engineering consultants are located, Weir Minerals is nearby to provide full technical support throughout the project and thereafter. Weir Minerals has its own sales offices in most major countries, with dedicated FGD engineers strategically located worldwide and manufacturing facilities in four continents.

Weir Minerals North America

2701 S Stoughton Rd, Madison WI 53716
PO Box 7610, Madison WI 53707
USA

Tel: 608 221 2261
Fax: 608 221 5810
www.weirminerals.com

Excellent Minerals Solutions

WEIR MINERALS

Copyright © Weir Slurry Group, Inc 2008