SIHI*SuperNova* Programme
Range: ZEND
Volute casing pump for hot water to DIN 22858*
Designed for use above 120 ºC only
PUMP DESCRIPTION _____
SERIAL NUMBER _____

Operating instructions
Translation of the original instructions

*** With certain exceptions – see Technical Catalogue**

Attention: Both the pump and/or the pump set must be installed and commissioned by qualified technical personnel only and these installation, commissioning and operating instructions must be strictly observed. Failure to do so could result in:

- **danger** to you and your colleagues,
- **the pump** or **the pump unit** may be **damaged**,

Note that the manufacturer is not liable for damages resulting from failure to observe these instructions. Please be aware of your responsibility to your colleagues when working on the pump or the pump set!

Safety instructions marked with Ex included in this Operating Instructions and in the Supplementary Operating Instructions, which must be attached to this Operating Instruction, have to be considered in particular when operating this pump in potentially explosive atmospheres!

1. Safety

This operating manual gives basic instructions, which must be observed during installation, operation and maintenance of the pump. It is therefore imperative that this manual is read by the responsible personnel/operator(s) prior to assembly and commissioning. It must always be kept available at the site of pump installation.

It is not only the general safety instructions contained in this chapter “Safety” which must be observed, but also the specific information provided in the other chapters.

1.1 Identification of safety symbols in the operating instructions

Safety symbols are given in these operating instructions. Non compliance with these would affect safety and are identified by the following symbol

Danger symbol as per DIN 4844-W9
(ISO 3864 - B.3.1)

Or in case of danger of electric current with:

Danger symbol as per DIN 4844 W-8
(ISO 3864 - B.3.6)

The word

ATTENTION

identifies those safety regulations where non-compliance may pose a danger to the pump and its function. It is imperative that the appropriate safety information is attached to the pump/pump set, for example:

- An arrow indicating the direction of rotation.
- Symbols indicating fluid connections.
- The identification plate.

and that these are kept legible.

1.2 Qualification and training of personnel

The personnel responsible for operation, maintenance, inspection and assembly must be adequately qualified. The scope of responsibility and supervision of the personnel must be exactly defined by plant management. If the staff do not have the necessary knowledge, they must be trained and instructed. This task may be performed by the machine manufacturer or supplier on behalf of the plant management. Moreover, plant management must ensure that the contents of the operation instructions are fully understood by plant operators and other relevant personnel such as maintenance staff.

1.3 Hazards in case of non compliance with safety instructions

Non compliance with the safety instructions may result in risk to personnel as well as to the environment and the pump/pump set and result in the loss of any right to claim damages.

For example, non-compliance may result from, or lead to, the following:

- Failure of important functions of the pump/pump set/plant.
- Failure of specified procedures of maintenance and repair.
- Exposure of people to electrical, mechanical and chemical hazards.
- Danger to the environment owing to hazardous substances being released.

1.4 Compliance with regulations relating to safety at work

When operating the pump the safety instructions contained in this manual, the relevant national accident prevention regulations and any other service and safety instructions issued by plant management must be observed.

1.5 Safety instructions relating to operation

- If high or low temperature pump/pump set components involve hazards, steps must be taken to avoid accidental contact.
- Guards for moving parts (e.g. couplings) must not be removed from the pump/pump set while in operation.
- Any leakage of hazardous (e.g. explosive, toxic, hot) fluids (e.g. from the shaft seal) must be drained safely so as to prevent any risk to persons or the environment. Statutory regulations are to be complied with.
- Hazards from electricity are to be avoided by the user (see for example the VDE-specifications and the bye-laws of the local power supply utilities).

1.6 Safety instructions relevant for maintenance, inspection and assembly work

It is the plant management's responsibility to ensure that all maintenance, inspection and assembly work is performed by authorized personnel who have adequately familiarised themselves with the subject matter by studying this manual in detail.

Any work on the machine must only be performed when it is at a standstill. It is imperative that the procedure for shutting down the machine described in this manual is followed.

Pumps and pump sets, which convey hazardous media, must be decontaminated.

On completion of the work all safety and protective guards must be re-installed and made operative again. Prior to re-starting the machine, the instructions listed under "first commissioning" are to be observed.

1.7 Safety instructions for the use in areas with explosion hazard

In this section information is given for operation in areas where an explosion hazard exists.

1.7.1 Complete pump sets

If the pump is combined with other mechanical or electrical components in one set, the category of the complete unit will correspond, based upon the Directive 94/9/EC, only to that category with which all of its components comply.

Note:

These comments are of particular importance when pumps, which conform to a given category of Directive 94/9/EC, are powered by a driver which is not in the same category.

Although the pump may bear the Ex sign, the set should not be used in areas with an explosion hazard when the motor is not classified for this application.

This means that plant management personnel should always check that all elements of the set comply with the Directive 94/9/EC.

1.7.2 Execution of coupling guards

Coupling guards that are to be used in areas with an explosion hazard, have to fulfil one of the following criteria:

- Consist of non-sparking material, e.g. brass.
- If they consist of sparking material, e.g. steel sheet, they must be designed in such a way that the rotating parts will not come in contact with any part of the guard if errors, that could be foreseen, are committed by the user, e.g if a person steps on the guard.

1.7.3 Monitoring technical parameters

When using pumps in areas with an explosion risk, the operator must check the following parameters regularly:

- Leakage of shaft seals.
- Bearing temperature.
- That the pump is always filled with liquid during operation.
- That the pump does not operate against a closed valve for any length of time.

The operator must ensure that pumps, which show evidence of abnormal operation, are switched off and not started again until the cause of the abnormal operation has been eliminated.

1.7.4 Avoiding external damage

In areas with a risk of explosion the operator must ensure that the pumps and or pump set is not subjected to external impacts e.g by heavy objects.

1.8 Unauthorized alterations and production of spare parts

Modifications may be made to the pump/pump set only after consultation with,and written approval from, the manufacturer. Using spare parts and accessories authorized by the manufacturer are in the interests of safety. Use of other parts may exempt the manufacturer from any liability.

1.9 Unauthorized mode of operation

The reliability of the pump / pump set can only be guaranteed if it is used in the manner intended and in accordance with the instructions of this manual. The specified limit values must under no circumstances be exceeded.

1.10 Warranty / guarantee

Sterling Fluid Systems guarantee satisfactory operation if:

- The pump is installed and operated in compliance with these instructions and in operating conditions approved by Sterling Fluid Systems.
- Modifications are only undertaken with Sterling Fluid Systems' written agreement.

2. Application

The pump is to be used only for the operating conditions stated by the customer and confirmed by the supplier. Guarantee is assumed within the scope of the **Sterling Fluid Systems** conditions of sale.
Appropriate application and operating conditions are contained in the attached data sheets.

2.1 Warning of misuse

- Do not touch hot pumps.
- The pump may only be used for the application(s) stated. Otherwise hazards for people and environment may arise.

ATTENTION

- Never subject the pump to a temperature shock. Never spray off the hot pump with cold liquid.
- Do not exceed fluid density stated. Otherwise, there is a danger of motor overload.
- The pump must not be operated beyond its characteristic curve. Otherwise there is a danger of cavitation and motor damage.

2.2 Accessories

The accessories included in the scope of supply are indicated in the delivery note or in the order confirmation. The corresponding operating and installation instructions are also indicated in the Annex relating to accessories.
If it is intended to mount other accessories on the pump or on the pump set, please inform the manufacturer in advance in order that appropriate technical advice can be given.

2.3 Construction and mode of operation

ZEND pumps are horizontal, single-stage volute casing pumps to DIN EN 22858 and are particularly suited for handling hot water up to 230ºC with an uncooled balanced mechanical seal. These pumps have the following features:

- The double heat blocking enables an optimum energy result for the pump and reduces the temperature level in the mechanical seal chamber to less than 100℃ without external coolant circuits. The service life of the mechanical seal is considerably improved.
- By a special concept accumulations of gas in the mechanical seal chamber are independently pumped to the ventilation. Thus a dry operation of the mechanical seal can be excluded.
- The process construction allows the disassembly of the complete bearing unity towards the driving side without having to remove the pump casing from the pipe union. When using a coupling with dismountable piece the loosening of the motor is also not necessary.

2.4 Description

Type Size	Hydraulic + Bearing	Shaft sealing	Material	Casing gasket
ZEND 031125 to 125250	A •: Hydraulic 1 • S: One grease lubricated reinforced antifriction ball bearing and one internal liquid flushed sleeve bearing.	BG3: SiC/Carbon, EPDM	1B: Pressure loaded parts in spheroidal cast iron GGG40.3 2B: Pressure loaded parts in cast steel GS-C25	2: confined flat gasket of graphite with A4 insertion
	A S	BG3	1B: 031125 to 125250 2B: 032160 to 125250	2

Example of a pump designation:

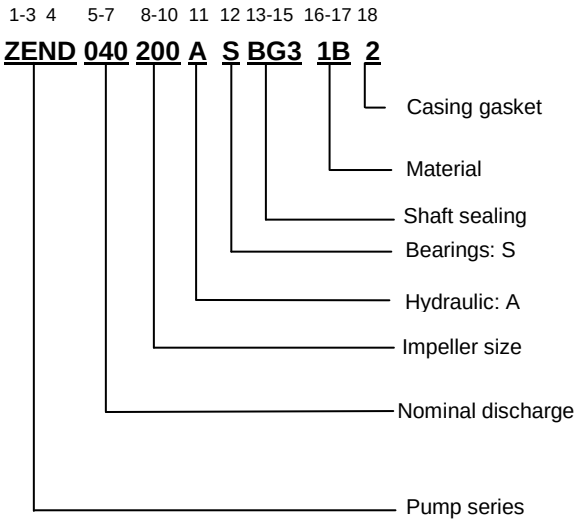

2.5 Shaft sealing

Depending on the application, different shaft sealing executions are offered (see 2.4)

Mechanical seals according to DIN 24960 are utilised in the following cases:

- If the pump draws from a suction line,
- if the pump is fed by a feed line with a pressure of less than 0.5 bar or
- if the pumped liquid is at or near its boiling point.

ATTENTION

Section 2.4 does not contain the codes for all variations of mechanical seals. Where the code is not included or replaced by QQQ, consult the relevant data sheet of the mechanical seal supplier (e.g. special execution of the mechanical sealing in a back to back position).

3. Planning the installation

3.1 Piping system

ATTENTION

- Note the arrows on the pump branches indicating the direction of flow.
- Choose nominal widths of the pipelines according to the nominal widths of the pump branches or larger ones with the corresponding reductions.
- Flange sealing must not protrude on the inside.
- Ensure that the pipework is clean before installing the pump.
- Support the pipework in order to avoid distortions at the pump components (risk of damage to pump components)
- Avoid abrupt changes of cross section and direction.
- Where different diameter pipework is to be used, connection should be by eccentric transition pieces. This will avoid the formation of air pockets in the pipework.
- For difficult pumping on the suction side, to stabilise the flow, a pipe length 15 times the diameter of the suction branch should be installed before the suction branch.
- The flow rate in the suction line or inflow line, must not exceed 2 - 3 m/s.

3.1.1 Suction line / inflow line

See the sketches below for the optimum layout of pump installation for flow and suction lift operation.

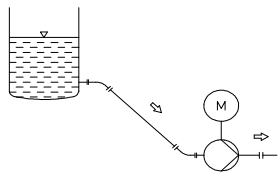

Positive suction head operation

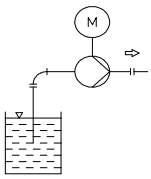

Suction lift operation

Ensure that air pockets cannot be created. Unequal nominal widths of the suction branch and suction line must be compensated by eccentric transition pieces.

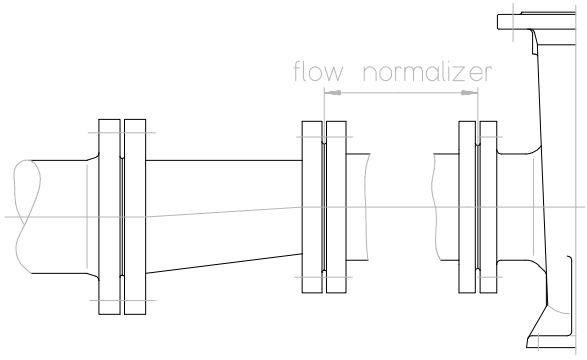

Connection of eccentric pipe transitions

It is recommended that a filter is installed in front of the pump with a filter surface of at least 3 times the pipe cross section (approx.100 meshes/cm²).

A shut-off valve should be installed in the feed line. It must be closed for maintenance work.
It should be installed in order to avoid air pockets forming in the spindle cap, i.e. with the spindle in a horizontal position or pointing vertically downward.

3.1.2 Discharge line

The discharge line is to be laid steeply, a constant cross section should be aimed at.
For flow regulation, a valve must be installed behind the pump. If non-return valves are used, they should close smoothly. Pressure shocks must be avoided.

3.1.3 Inlet and outlet connections

The various connecting points are shown in the drawings. (See Annex, Chapter 10, point 10.1).

3.1.4 Pressure control

For consistent control of pressure, it is advisable to install in the pipework a measuring point in front of, and behind the pump.

3.2 Electrical connections

For the drive motor a main connection is required which complies with the European Regulations and Directives for the Standards in Industry and with the instructions of the local power supply utilities of the country concerned.

4. Unpacking, storage, handling

4.1 Safety measures

- Never stay below the suspended load.
- Keep a safe distance while the load is being transported.
- Use only approved lifting appliances, which are in good condition.
- Adjust the length of the lifting appliances in such a way that the pump and / or the pump set, is suspended horizontally.
- Do not use the eyebolts on the pump components for lifting the assembled pump or the complete set.
- Do not remove documents, which are attached to the pump.
- Do not remove the protection covers from the pump suction/discharge. Otherwise, there may be a risk of contamination.

4.2 Unpacking

Before unpacking, a visual check of the packing is recommended. If transport damage is visible, the extent should be noted on the receipt or on the delivery note. Potential claims must be lodged immediately with the carriers or the insurance company.

4.3 Interim storage

If the pump or the pump unit is not installed immediately after delivery, it must be stored free from vibration in a dry room.

4.4 Handling

The pump or pump set must be lifted and handled as shown in the following sketches.

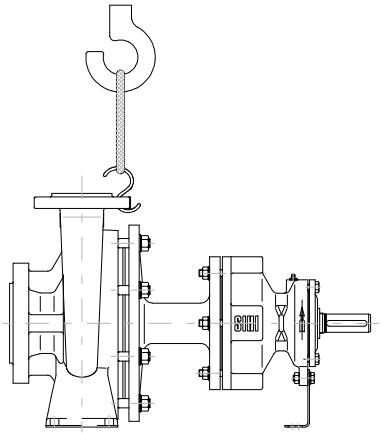

Bareshaft pump

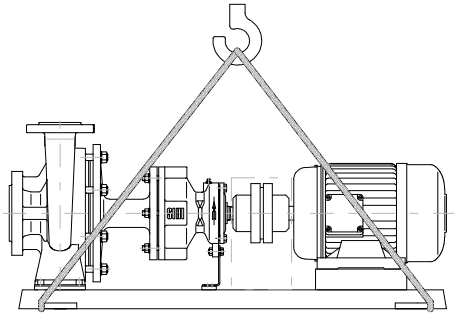

Pump set

4.5 Protection against corrosion

In general, a protective coating is applied into the pumps.

4.5.1 Removal of protection

The protective coating is compatible with normal hot water. To remove the protective coating, the pump should be filled, flushed and drained with water.

The operator must ensure that the pump is clean and completely free of oil.

4.5.2 Renewing corrosion protection

If the pump has been supplied with a protective coating and has to be stored, a new protective coating should be applied after six months.

For suitable protective coatings, contact **Sterling Fluid Systems**.

5. Installing the pump

5.1 Requirements

The pump and the pump set, must have been unpacked and handled as described in Chapter 4.

5.2 Use of trained staff

Only appropriately trained staff must undertake the work described in this chapter.

5.3 Safety measures

- Connect the pipework carefully to prevent the pumped liquid escaping during operation and endangering operating personnel.
- Ensure that the suction or inflow line, and the discharge line are closed by valves.
- Ensure that all electrical connections are “dead”. Otherwise, there is a risk of electric shock.
- Pay attention to relevant internal plant regulations.
- Avoid accidental contacts with hot components.

ATTENTION

- The operator must ensure that the pump, internally, is clean and free of oil.

5.4 General information

5.4.1 Assembly tools

Special tools are not required for assembly and installation.

5.4.2 Permissible ambient conditions

The ambient temperature can be from -20 ℃ to +60 ℃. The atmospheric humidity should be as low as possible in order to avoid corrosion.

5.4.3 Base, foundation

The pump must be installed on a flat floor or foundation free from vibration. In case of doubt, use vibration dampening feet.
The pump set must be correctly mounted on the foundations. To avoid distortion of the pump set and/or the foundation, parallel shims must be used between the base plate and foundation.

Prior to installing, checks should be made with regard to:

- Possible damage to the pump or the pump set that may occur in transit.
- Ease of running (check that the shaft is free to rotate by hand)
- The foundation dimensions.

The following preparatory work must be carried out before to placing the pump:

- Roughen and clean foundation surface.
- Remove shuttering / cores from the anchor holes.
- Blow the anchor holes clean.
- Check the position and dimensions of the anchor holes against the arrangement drawing.

5.4.4 Installation of the set

The complete set mounted on the base plate must be placed on the foundation with its foundation (rag) bolts hanging below the baseplate.

5.4.5 Space required

The space required for the pump set is set out in the foundation plan or installation drawing.
Ensure easy access to the shut-off and regulation valves as well as to any measuring instruments.

5.4.6 Position

ZEND pumps are installed horizontally.

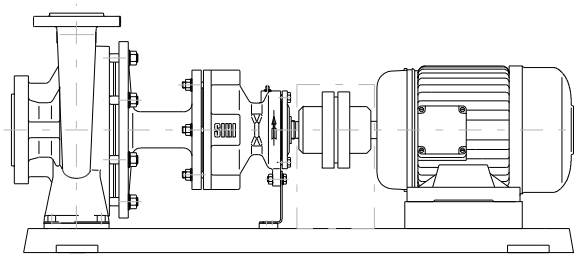

5.5 Motor

Before assembly check the direction of rotation of the motor (indicated by an arrow on the pump casing). If this is not possible, the direction of rotation of the complete unit can only be checked only if the pump is filled.

In any event, the operating instructions of the motor manufacturer must be followed, since the motor is generally incorporated by STERLING FLUID SYSTEMS into the pump set.

5.6 Alignment of the set

Place shims under the base plate on both sides of the foundation bolts, 10 mm from the base plate edge. Use a spirit level to align the set.

If necessary, place shims between the foundation bolts to prevent the base plate from sagging. Care should be taken to minimize distortion of the base plate during installation. The location of the driver must not be higher than that of the pump. The max.deviation from the shaft centre line is ± 0,1 mm.

The foundation bolts should be embedded in concrete using quick-setting grout.

5.7 Coupling

Install the coupling avoiding hard blows, if necessary in warm condition. Arrange the pump and motor on a level base. The shaft ends must be aligned exactly. The distance between each half of the N-EUPEX B (FLENDER) coupling must be 2 - 3 mm (see fig.).

If other manufacturers' couplings are used, follow the manufacturer's instructions. After the installation on the foundation and connecting the pipework, the coupling alignment must be checked and re-aligned, if necessary. Moreover, after reaching the operating temperature the alignment of the coupling must be checked again.

The coupling requires a guard that meets DIN 31001 in order to avoid accidental contact during operation.

In any event, the operating instructions of the coupling manufacturer must be followed, since the coupling is a component incorporated by **Sterling Fluid Systems**.

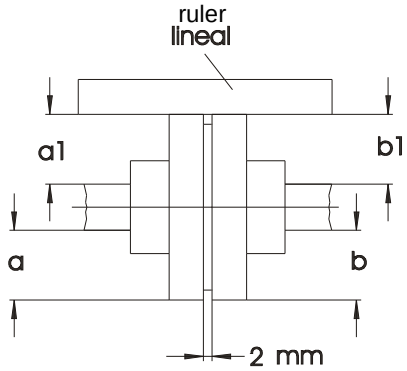

The following is required: a = a1 and b = b1

5.8 Checking before installation

Before installing the pump on the plant, the following points must be checked:

1. Is the electrical current to the drive motor switched off?
2. Are suction and discharge lines emptied and closed by valves?
3. Is it possible to rotate the pump easily by hand (for this purpose turn the fan of the motor or the coupling)?
4. Have the latest internal/plant instructions been observed?

5.9 Mounting the pump and installation into pipework

The following instructions must be carried out:

1. Remove the protective covers from the pump flanges and the auxiliary pipework connections.
2. Correctly insert the flange seals.
3. Connect the suction or feed line.
4. Connect the discharge line.

The pump must be aligned with the pipework. The pipework must be supported so that distortion cannot occur when connecting the pump.

5.10 Final work

The following final steps must be undertaken:

1. Check the tightness of the connecting flanges.
2. Check for easy running of the pump (for that purpose turn the motor fan or the coupling).
3. Check the coupling alignment.
4. Install the coupling guard.

5.11 Hydrostatic pressure test

When subjecting the piping system to a hydrostatic pressure test, exclude the pump from the pressure test.

If it is not possible to test the pipework without the pump, ensure that foreign material cannot enter the pump.

- The **max. permissible** pressure for a pressure test is **1,3 times** the nominal pump pressure.
- The nominal pump pressure is indicated in the tecnical data sheet.
- Water should be used for testing.

6. Start-up and shut-down operations

6.1 Requirements

The pump or the pump set, must be installed according to the instructions of chapter 5.

6.2 Use of trained staff

Only appropriately trained staff must carry out the work described in this chapter.

6.3 Safety measures

- Electrical connections must be made according to the European Regulations and Directives for the Standards in Industry and in compliance with the instructions of the local power supply utilities of the country concerned.
- Only appropriately authorised personnel may carry out this work.

ATTENTION

- Fill the pump correctly; otherwise the shaft seal could be destroyed.
- Fill the supply lines correctly.
- Check the direction of rotation only when the pump is filled.
- Fill the pump slowly if hot media are being pumped in order to avoid distortions or heat shock.
- When handling explosive, toxic, hot, crystalline or corrosive media, ensure that there is no risk to people or the environment.
- Control the output at constant speed at the discharge side only. The valve at the suction side must always be completely open during operation to avoid the risk of cavitation.
- If there is no bypass line, do not run the pump with the control valve closed for any length of time.
- Safety measures should be taken by the end user to ensure (for example by means of a relief valve) that the permissible pump casing pressure is not exceeded during operation
- Repeat the alignment of the coupling at operating temperature. Re-align the pump or the motor, if necessary.

6.4 Filling / Ventilating

Before the first start, the pump as well as the suction or inflow line must be completely filled with the pumping medium in order to avoid dry operation of the pump. The pump and mechanical seal chamber must be completely ventilated. The bellow stated ventilation valve must be opened till no air leaves anymore.

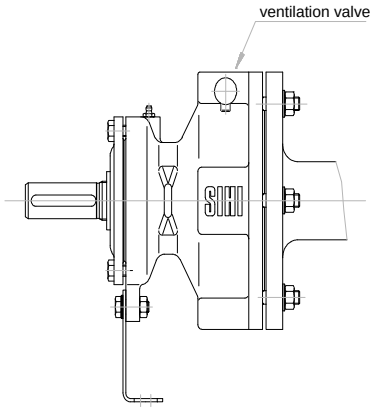

If the pump is ventilated with hot media, hot media also issue through the valve. With too long and improper ventilation vapour can leave: Danger of scald!

- Wear protective gloves!
- Use pliers!
- Do not touch hot pump parts!
- Close the valve as soon as no air leaves anymore!

ATTENTION

Incomplete ventilation may shorten the service life of the pump.

6.5 Electrical connection

The motor must be connected at set out in the circuit diagram in the terminal box.

6.6 Checks before switching-on

Before switching on the pump unit, the following points should be checked:

1. Is all pipework connected and are the unions tight?
2. Is the pump including the pipework filled properly?
3. Is the shut-off valve in the discharge line closed?
4. Is the shut-off valve in the suction line completely opened?
5. Is the motor ready for operation?
6. Is the direction of rotation of the motor correct? (check by running the motor for a short time)
7. Is the coupling aligned exactly?
8. Has the shaft seal been installed?
9. Is the pump completely ventilated?

6.7 Start-up operation

For starting proceed as follows:

1. Open fully the valve on the suction side.
2. Close the valve on the discharge side.
3. Switch on the motor.
4. Check the pressure gauges at the pressure measuring points.

If the pumping pressure does not increase consistently with increasing speed, switch off the motor again and vent the pump one more.

5. After reaching operating speed, regulate the operating point of the pump by adjusting the valve in the discharge line (see technical data for permissible range of operation).

Pumping against a closed valve in the discharge line is permitted only if a minimum output via a bypass line is guaranteed.

By means of corresponding safety measures (for example overflow valve) it must be ensured that the admissible casing pressure of the pump is not exceeded caused by malfunction during operation.

The alignment of the coupling should be repeated under hot running conditions. If necessary, the pump or the drive motor are to be realigned.

6.8 Switching frequency

The pump may be switched off max. 8 times equally spaced per hour.

6.9 Special instructions

During operation the following points must be observed:

- Control the speed and the delivery head.
- Ensure that the pump runs without vibration.
- Control the liquid level in the suction line and / or inflow tank.
- Control the bearing temperature (max. temperature 100 ℃)
- Shaft seal: leakages of some cm³/h at the shaft seals leave the shaft seal as vapor or smoke. Furthermore, however, also slight drop leakages may occur.

With strong leakage vapor can leave the shaft seal, there is the danger of scald.

ATTENTION

If the leakage quantity becomes considerably higher after the run-in of the shaft seal, the pump must be switched off as soon as possible and the shaft seal must be rechecked.

6.10 Shutting-down

Before shutting down, close the valve on the discharge side.

After shutting down, all valves may be closed. If there is a risk of very low ambient temperatures, remove the pump and then drain it using the threaded plug.

When handling explosive, toxic, hot, crystalline or corrosive media, ensure that people and the environment are not endangered. Even if the pump has been drained, residues can remain in the pump. For transport, the pump must be free from any dangerous material. In case of extended periods out of service, protect the pump against corrosion.

7. Maintenance, dismantling and assembly

7.1 Requirements

The pump or the pump set must have been shut down in the manner described in chapter 6.

7.2 Use of trained staff

Only appropriately trained and skilled staff should undertake the work described in this chapter.

Only authorized personnel must undertake electrical work associated with maintenance of the pump / pump set.

7.3 Safety measures

- For explosive, toxic, hot, crystalline as well as different pumping media ensure that people and the environment are not endangered.
- Flush the pump with clean liquid before dismantling.
- The working place for disassembly or assembly must be clean.
- Before reinstallation, the pump must be free of any dangerous material.

7.4 Maintenance and inspection

The pump requires only limited maintenance.

7.4.1 Bearing with grease lubrication

The bearings should be re-lubricated at regular intervals.

Lubricating intervals:

Grease lubrication	n ≥ 1450 rpm	n ≥ 2900 rpm
Follow-up lubrication	2000 operating hours	700 operating hours

Grease quantities:

Bearing	Bearing bracket	Monthly [g]	New lubrication [g]
S	25	4,1	15
	35	7,5	30
	45	10,2	50

The following bearing grease should be used :

- Grease: On lithium soap base, resin and acid free, antirust.

- Recommendation: Lubricating grease K 3 K, DIN 51825

- Characteristics:
  - Consistence no. 1
  - Worked penetration: 310 to 340
  - Service temperature: 140ºC
  - Drop point: 250℃

e.g. Microlube GL 261 (Klüber)
Aero Grease 16 (Shell)
Unirex N3 (Esso)

Bearings

The initial filling of grease is carried out at the works. A grease nipple (DIN 71412, Form A) is provided for subsequent greasing.

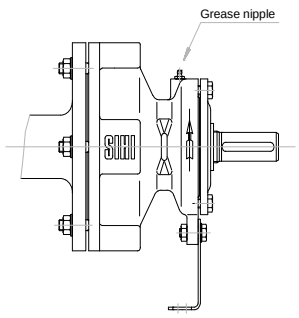

After about 10.000 working hours, but not later than 2 years, the bearings should be removed, cleaned and re-filled with new grease. On specially unfavourable operating conditions (wet or dusty or high ambient temperature) the lubrication intervals must be considerably shorter.

If a different grade of suitable grease is used, the old grease must be removed completely from the bearings and bearing area in order to prevent interactive destruction of the grease.

7.4.2 Inner sleeve bearings

The inner sleeve bearings also require no maintenance.

7.4.3 Mechanical seal

The shaft seals require no maintenance whilst in operation. Leakage appears as a liquid at medium temperatures < 100 ℃ at the inspection openings between the bearings and mechanical seal chamber. At temperatures > 100 ℃ the leakage appears as a vapour.
Caution: danger of scalding.

7.4.4 Drive motor

The drive motor must be maintained according to the instructions of the manufacturer.

7.5 Dismantling

7.5.1 Preparation for the dismantling

Proceed as follows:

- Disconnect power to the motor.
- Drain the plant, at least within the pump area, i.e. between the valves on the suction and discharge side.
- If necessary, disconnect any measuring probes or control devices and remove them.
- The pump casing must not be detached from the pipe union.
- Remove motor mounting bolts and move the motor so that there is sufficient space to remove the back pull out unit. When using a spacer coupling repositioning of the motor is not necessary.
- Dismantle guard coupling, pump feet and coupling.

7.5.2 Replacement parts

The item numbers necessary for ordering spare parts are provided in the component parts list in the Annex.
The joint rings are always to be replaced when re-assembling.

7.5.3 Dismantling the pump

- <u>For executions with size 031125:</u>

1. Mating parts should be marked with a crayon or a scriber.

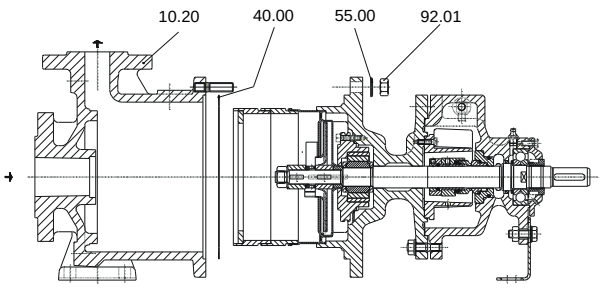

Fig.1

2. Unscrew nuts 92.01 and remove washers 55.00

> ⚠
> To support the complete assembly, take care to trap any outflowing water.

3. Withdraw complete back pull-out unit from pump housing 10.20 and remove joint ring 40.00 (fig.1)
4. Dismantle intermediate ring 50.90, blind stages 11.30 and intermediate piece 10.91. If restricted, these parts can remain in the housing (fig. 2).
5. Bend up tab washer 93.10 and unscrew impeller nut 92.20 (fig. 2).
6. Remove lock washer 93.10, distance piece 52.53, lantern ring 45.80 and impeller 23.00 (fig. 2).

7. Remove spring washer 94.11, intermediate piece 17.11 and distance piece 52.54 (fig. 2).

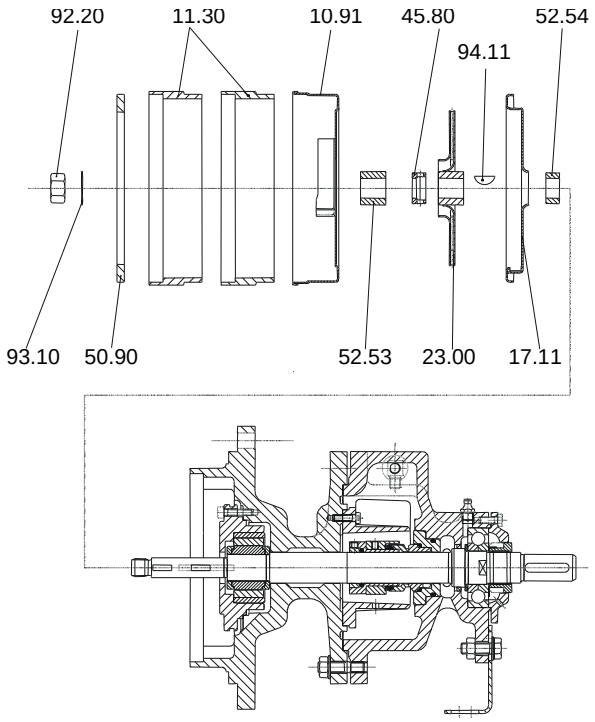

Fig. 2

8. Remove Allen screws 91.41 and dismantle bearing carrier 35.00 (lever out if necessary) (fig. 3).

ATTENTION

Do not jam bearing carrier or loosen with a hammer (SIC-bearings!).

9. Withdraw bearing bush 52.90 and spacer rings 52.51 from the shaft (fig. 3).
10. Loosen hexagonal nut 92.02, remove washer 55.02 and dismantle intermediate flange 15.20 (fig. 3).
11. Only if damaged, dismantle the housing for mechanical seal 44.10. To do this, unscrew bolts 91.40 and remove the housing (fig. 3).

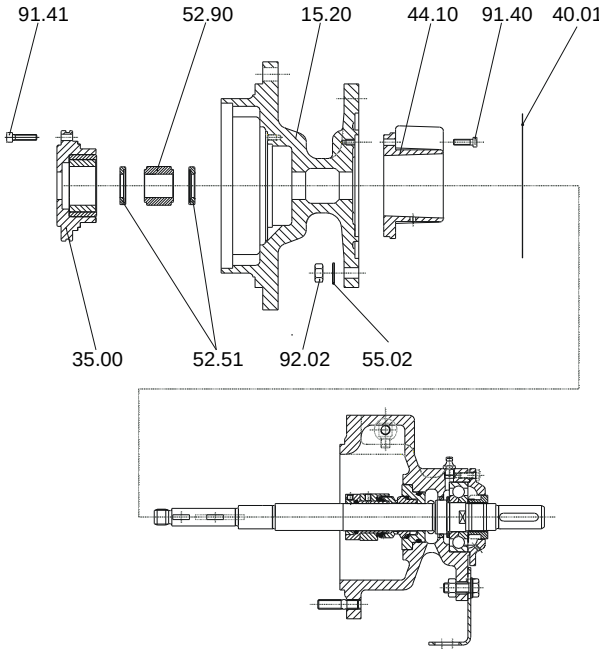

Fig. 3

12. Mark position of mechanical seal. Loosen the locknut on shaft sleeve 52.30 and remove with the mechanical seal rotary element (fig. 4).

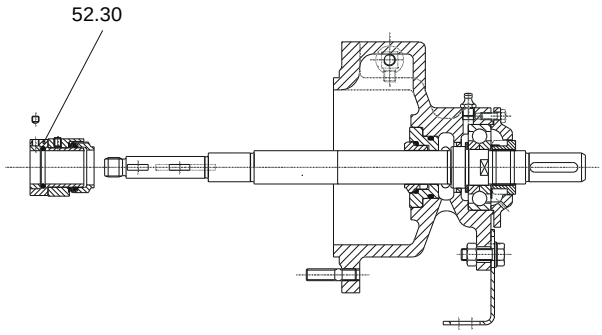

Fig. 4

13. Remove mechanical seal rotary element 43.30 from the shaft sleeve 52.30 (fig. 5)

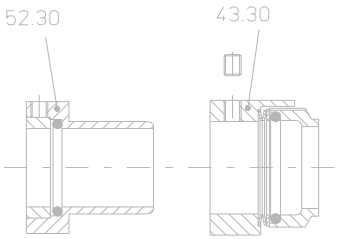

Fig.5

14. Loosen setscrews 90.10 and remove bearing cover 36.00. Press out shaft 21.00 with bearing 32.10 from bearing housing 33.00 (fig. 6).

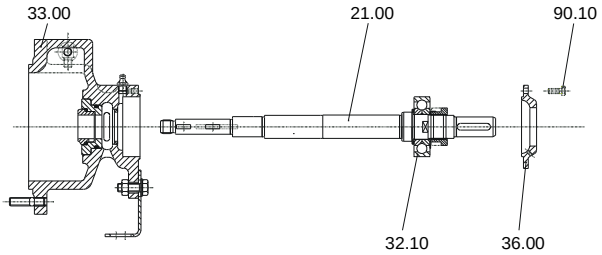

Fig. 6

15. Loosen shaft nut 92.21, remove lock washer 93.11 and withdraw bearing 32.10 and backing washer 52.50 (fig. 7).

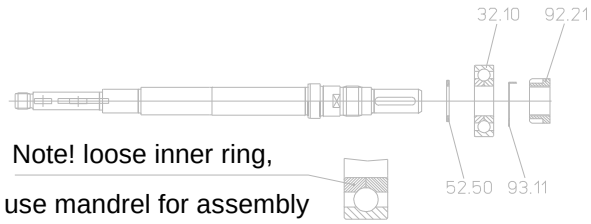

Fig. 7

16. Carefully press out the mechanical seal stationary seat from the bearing housing 33.00 (Fig. 8).

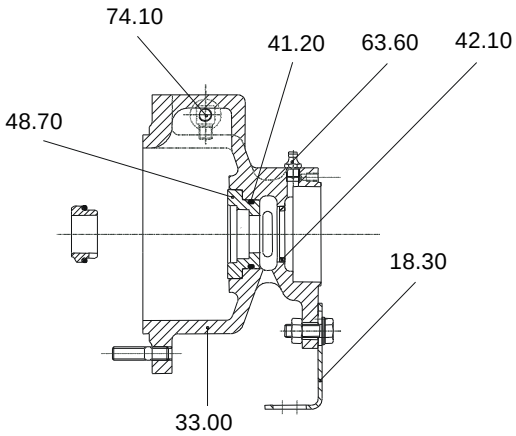

Fig. 8

17. Dismantle, only if required or damaged, venting valve 74.10, grease nipple 63.60, O-Ring 41.20 and stationary seat housing 48.70 with support foot 18.30. The stationary seat housing has to be forced out.

- <u>For executions with size 031160:</u>

1. Mating parts should be marked with a crayon or a scriber.

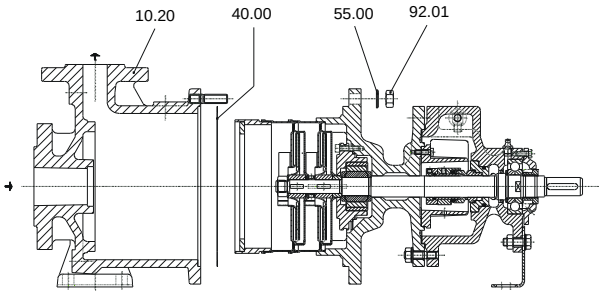

Fig.1

2. Unscrew nuts 92.01 and remove washers 55.00.

> ⚠
> To support the complete assembly, take care to trap any outflowing water.

3. Withdraw complete back pull-out unit from pump housing 10.20 and remove joint ring 40.00 (fig.1)
4. Dismantle intermediate ring 50.90, blind stages 11.30 and intermediate piece 10.91. If restricted, these parts can remain in the housing (fig. 2).
5. Bend up tab washer 93.10 and unscrew impeller nut 92.20 (fig. 2).
6. Remove lock washer 93.10, impeller 23.00, spring washer 94.11, intermediates pieces 17.11 and 10.91 in sequence (if restricted, remove intermediates complete) (fig. 2).
7. In sequence, remove lantern ring 45.80, second impeller 23.00, second spring washer

94.11, second intermediate piece 17.11 and distance piece 52.54 (fig. 2).

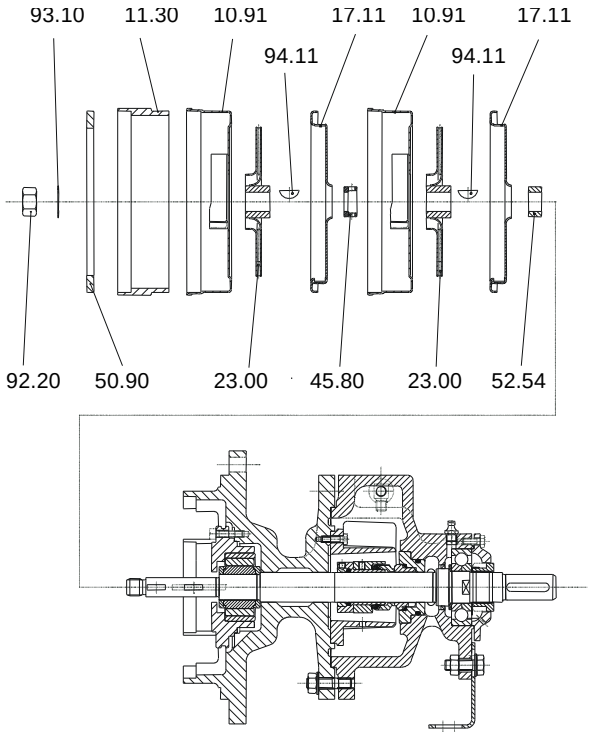

Fig. 2

8. Remove Allen screws 91.41 and dismantle bearing carrier 35.00 (lever out if necessary). (fig. 3)

ATTENTION

Do not jam bearing carrier or loosen with a hammer (SIC-bearings!).

9. Withdraw bearing bush 52.90 and spacer rings 52.51 from the shaft (fig. 3).
10. Loosen hexagonal nut 92.02, remove washer 55.02 and dismantle intermediate flange 15.20 (fig. 3).
11. Only if damaged, dismantle the housing for mechanical seal 44.10. To do this, unscrew bolts 91.40 and remove the housing (fig. 3).

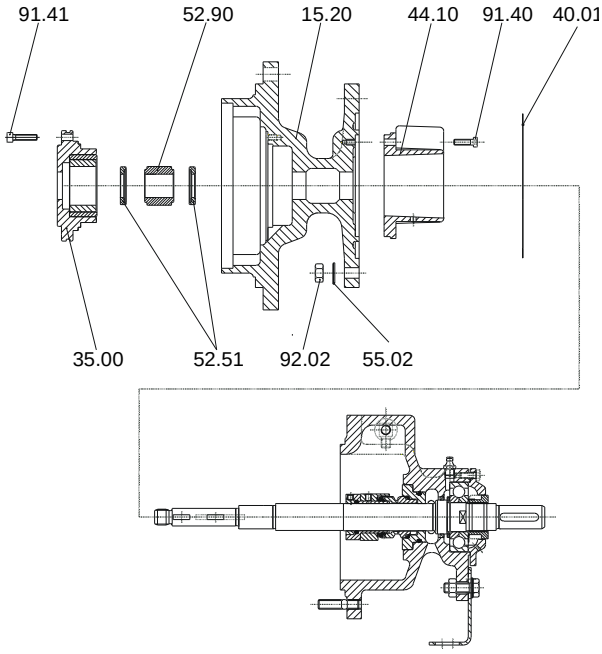

Fig. 3

12. Mark position of mechanical seal. Loosen the locknut on shaft sleeve 52.30 and remove with the mechanical seal rotary element (fig. 4).

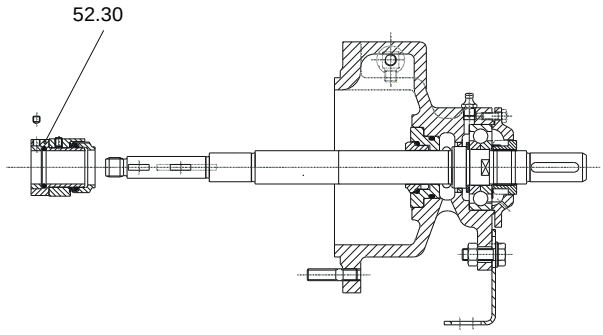

Fig. 4

13. Remove mechanical seal rotary element 43.30 from the shaft sleeve 52.30 (fig. 5)

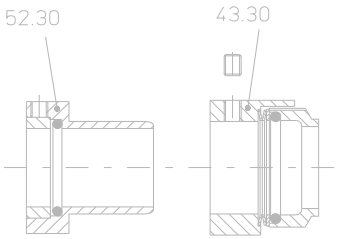

Fig.5

14. Loosen setscrews 90.10 and remove bearing cover 36.00. Press out shaft 21.00 with bearing 32.10 from bearing housing 33.00 (fig. 6).

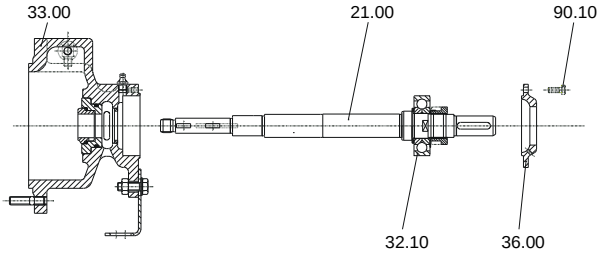

Fig. 6

15. Loosen shaft nut 92.21, remove lock washer 93.11 and withdraw bearing 32.10 and backing washer 52.50 (fig. 7).

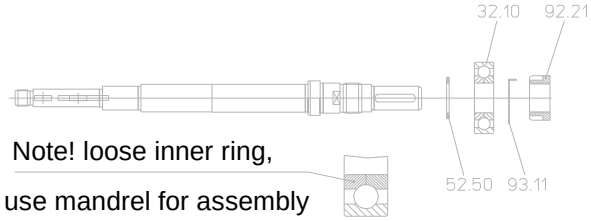

Fig. 7

16. Carefully press out the mechanical seal stationary seat from the bearing housing 33.00 (Fig. 8).

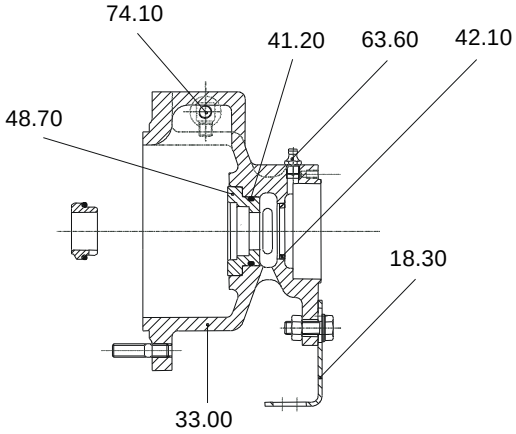

Fig. 8

17. Dismantle, only if required or damaged, venting valve 74.10, grease nipple 63.60, O-Ring 41.20 and stationary seat housing 48.70 with support foot 18.30. The stationary seat housing has to be forced out.

- <u>For executions with size 031200:</u>

1. Mating parts should be marked with a crayon or scriber.

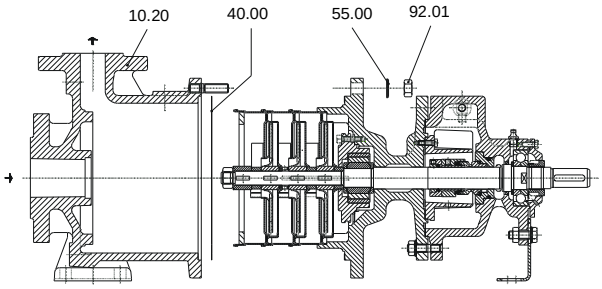

Fig.1

2. Unscrew nuts 92.01 and remove washers 55.00.

> ⚠
> To support the complete assembly, take care to trap any outflowing water.

3. Withdraw complete back pull-out unit from pump housing 10.20 and remove joint ring 40.00 (fig.1)
4. Dismantle intermediate ring 50.90 and intermediate piece 10.91. If restricted, these parts can remain in the housing (fig. 2).
5. Bend up tab washer 93.10 and unscrew impeller nut 92.20 (fig. 2).
6. Remove lock washer 93.10, distance pieces 52.53 and 52.54, impeller 23.00 and spring washer 94.11 (fig. 2).
7. In sequence, remove intermediate piece 17.11 and second intermediate piece 10.91 (if restricted remove complete), lantern ring 45.80, second impeller 23.00, second spring washer 94.11, second intermediate piece

17.11 and third intermediate piece 10.91, then distance piece 52.54. Finally remove third impeller 23.00, third spring washer 94.11, third intermediate piece 17.11 and distance piece 52.54 (fig. 2).

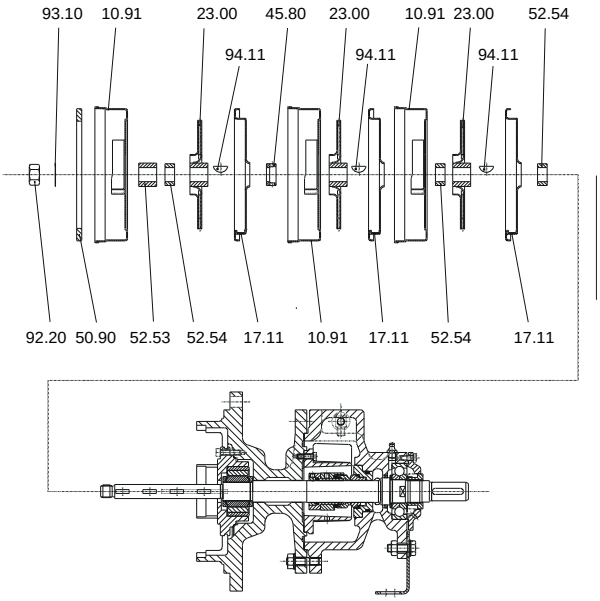

Fig. 2

8. Remove Allen screws 91.41 and dismantle bearing carrier 35.00 (lever out if necessary). (fig. 3).

ATTENTION

Do not jam bearing carrier or loosen with a hammer (SIC-bearings!).

9. Withdraw bearing bush 52.90 and spacer rings 52.51 from the shaft (fig. 3).
10. Loosen hexagonal nut 92.02, remove washer 55.02 and dismantle intermediate flange 15.20 (fig. 3).
11. Only if damaged, dismantle the housing for mechanical seal 44.10. To do this, unscrew bolts 91.40 and remove the housing (fig. 3).

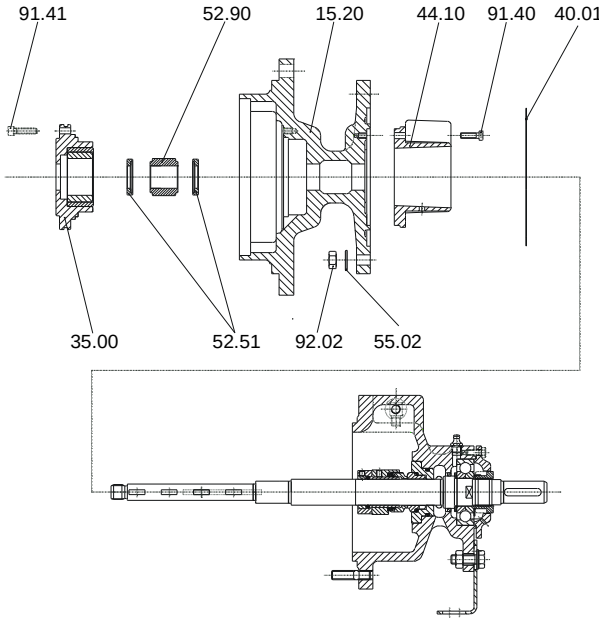

Fig. 3

12. Mark position of mechanical seal. Loosen locknut of the shaft sleeve 52.30 and remove with the mechanical seal rotary element (fig. 4).

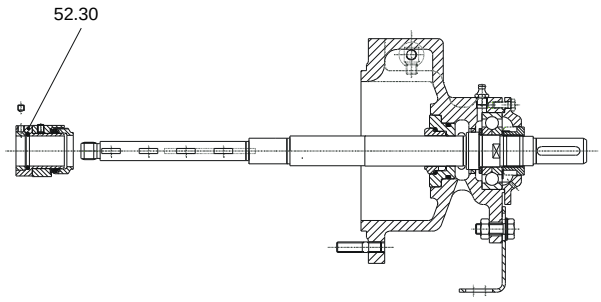

Fig. 4

13. Remove mechanical seal rotary element 43.30 from the shaft sleeve 52.30 (fig. 5)

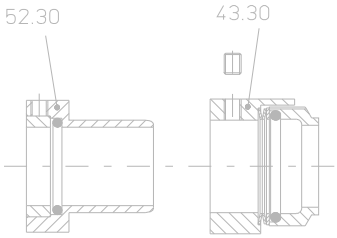

Fig.5

14. Loosen setscrews 90.10 and remove bearing cover 36.00. Press out shaft 21.00 with bearing 32.10 from bearing housing 33.00 (fig. 6).

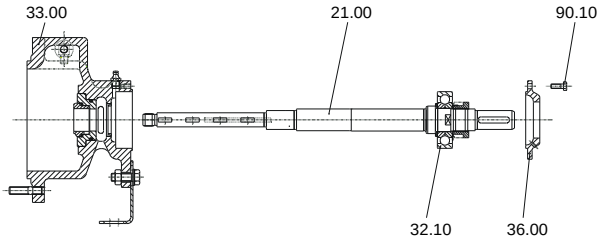

Fig. 6

15. Loosen shaft nut 92.21, remove lock washer 93.11 and withdraw bearing 32.10 and backing washer 52.50 (fig. 7).

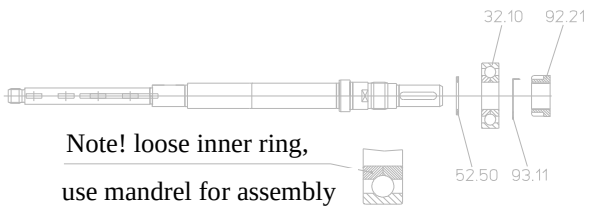

Fig. 7

16. Carefully press out the mechanical seal stationary seat from the bearing housing 33.00 (Diag. 8).

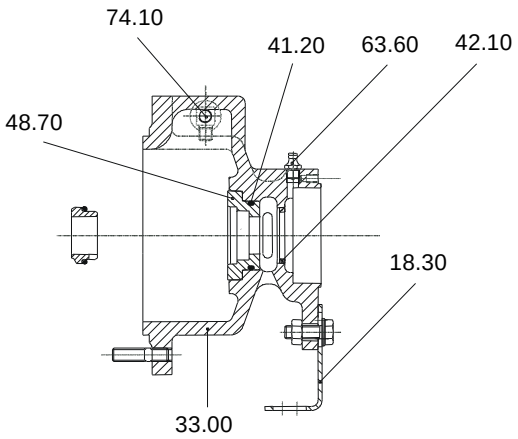

Fig. 8

17. Dismantle, only if required or damaged, venting valve 74.10, grease nipple 63.60, O-Ring 41.20 and stationary seat housing 48.70 with support foot 18.30. The stationary seat housing has to be forced out.

- <u>For executions with size 031250:</u>

1. Mating parts should be marked with a crayon or scriber.

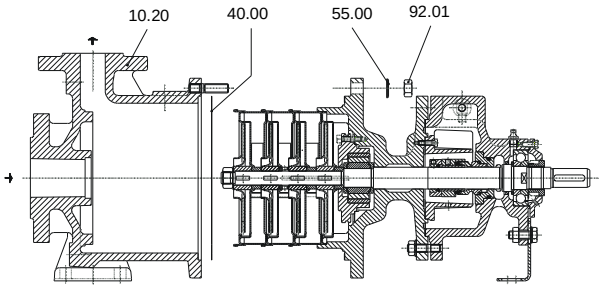

Fig.1

2. Unscrew nuts 92.01 and remove washers 55.00

> ⚠
> To support the complete assembly, take care to trap any outflowing water.

3. Withdraw complete back pull-out unit from pump housing 10.20 and remove joint ring 40.00 (fig.1)
4. Bend up tab washer 93.10 and unscrew impeller nut 92.20 (fig. 2).
5. In sequence, remove lock washer 93.10, impeller 23.00, spring washer 94.11, intermediates 17.11 and 10.91 (if restricted remove 17.11 and 10.91 complete) (fig. 2).
6. Then remove distance piece 52.54, second impeller 23.00, second spring washer 94.11, second intermediates 17.11 and 10.91 as well as lantern ring 45.80 (fig. 2).
7. Dismantle third impeller 23.00, third spring washer 94.11, third intermediates 17.11 and 10.91, distance piece 52.54 as well as the

fourth impeller 23.00 with spring washer 94.11, intermediate 17.11 and distance piece 52.54 (fig. 2).

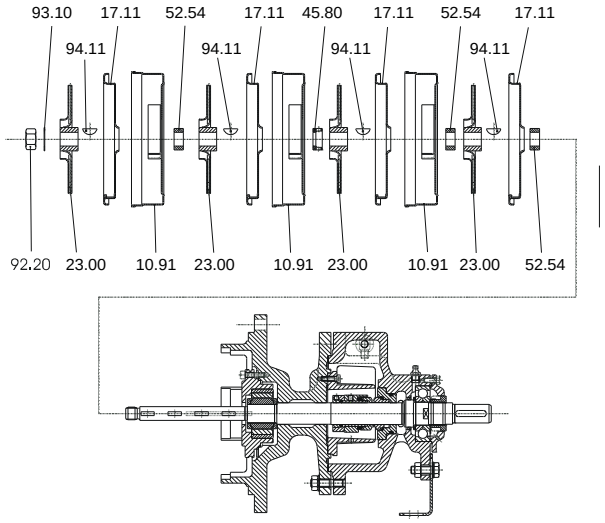

Fig. 2

8. Remove Allen screws 91.41 and dismantle bearing carrier 35.00 (lever out if necessary) (fig. 3).

ATTENTION

Do not jam bearing carrier or loosen with a hammer (SIC-bearings!).

9. Withdraw bearing bush 52.90 and spacer rings 52.51 from the shaft (fig. 3).
10. Loosen hexagonal nut 92.02, remove washer 55.02 and dismantle intermediate flange 15.20 (fig. 3).
11. Only if damaged, dismantle the housing for mechanical seal 44.10. To do this, unscrew bolts 91.40 and remove the housing (fig. 3).

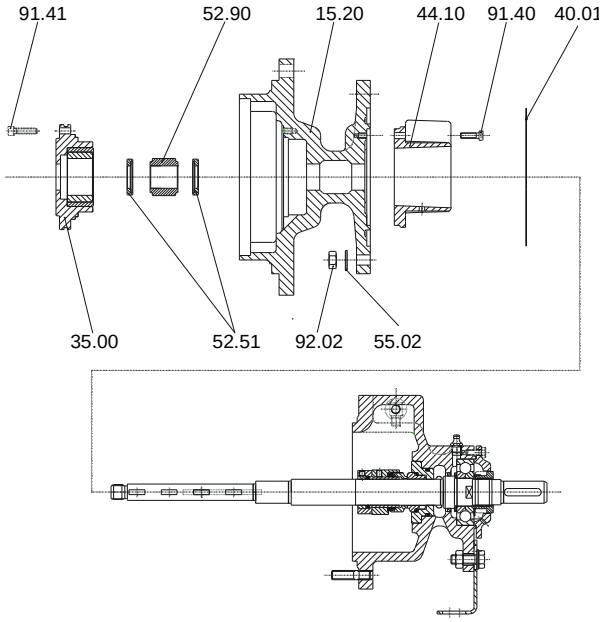

Fig. 3

12. Mark position of mechanical seal. Loosen locknut of the shaft sleeve 52.30 and remove with the mechanical seal rotary element (fig. 4).

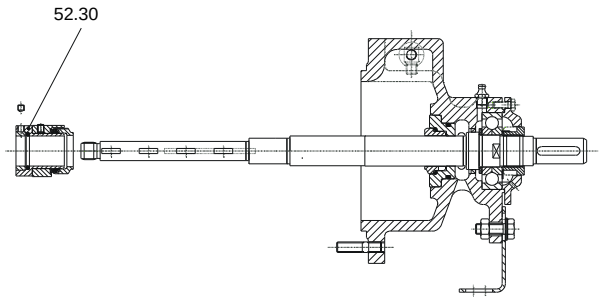

Fig. 4

13. Remove mechanical seal rotary element 43.30 from the shaft sleeve 52.30 (fig. 5)

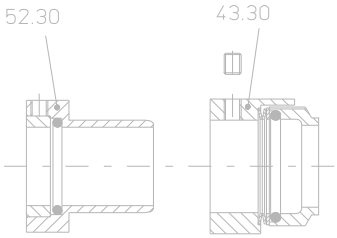

Fig.5

14. Loosen setscrews 90.10 and remove bearing cover 36.00. Press out shaft 21.00 with bearing 32.10 from bearing housing 33.00 (fig. 6).

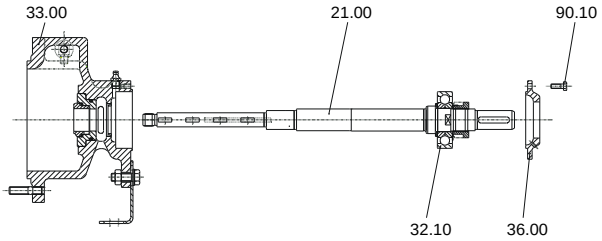

Fig. 6

15. Loosen shaft nut 92.21, remove lock washer 93.11 and withdraw bearing 32.10 and backing washer 52.50 (fig. 7).

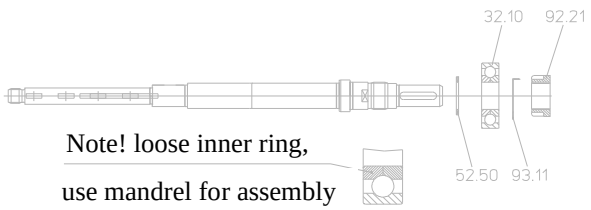

Fig. 7

16. Carefully press out the mechanical seal stationary seat from the bearing housing 33.00 (fig. 8).

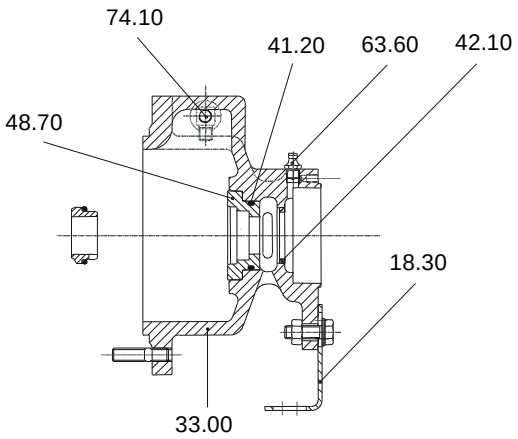

Fig. 8

17. Dismantle, only if required or damaged, venting valve 74.10, grease nipple 63.60, O-Ring 41.20 and stationary seat housing 48.70 with support foot 18.30. The stationary seat housing has to be forced out.

- <u>For executions with sizes 032160 to 125250:</u>

1. Mating parts should be marked with a crayon or scriber.

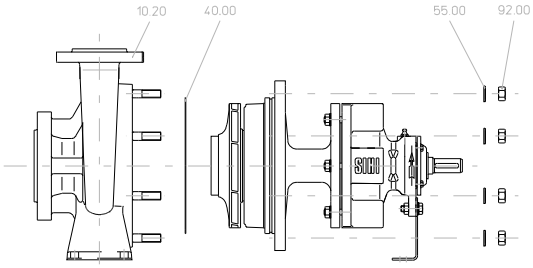

Fig.1

2. Unscrew nuts 92.00 and remove washers 55.00

> ⚠
> In order to support the complete assembly, take care to trap any outflowing water.

3. Withdraw the complete back pull-out unit from pump casing 10.20 and remove flat gasket 40.00 (fig. 1)
4. Bend up tab washer 93.10 and loosen impeller nut 92.20 (fig 2).

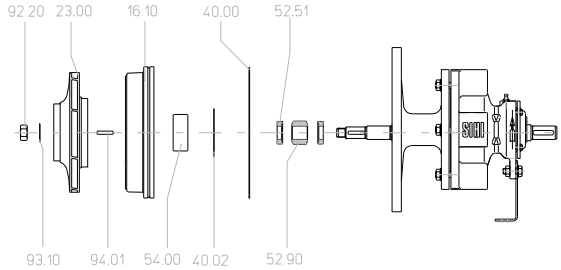

Fig. 2

5. Remove lock washer 93.10, impeller 23.00 and key 94.01
6. Carefully remove cover 16.10, including spacer rings 52.51 and bush 52.90. Dismount seal rings 40.00 and 40.02.

ATTENTION

Do not jam cover or loosen with hammer (SiC-bearings!).

Press out bearing bush 54.00 if damaged or heavily worn.

7. Loosen hexagonal nut 92.02, remove washer 55.02 and dismantle intermediate flange 15.20, removing flat gasket 40.01. (fig.3).

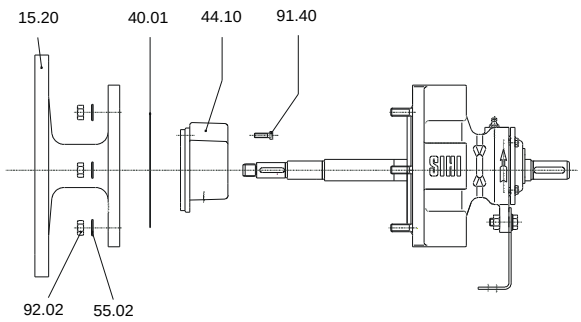

Fig. 3

8. Only if damaged, remove mechanical seal housing 44.10. To do this, unscrew bolt 91.40 and remove the housing.
9. Mark position of mechanical seal. Loosen locknut on shaft sleeve 52.30 and remove with the mechanical seal rotary element (fig.4).

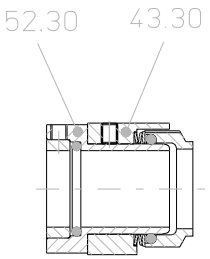

Fig. 4

10. Remove rotary element of the mechanical seal 43.30 from the shaft sleeve 52.30 (fig.5).

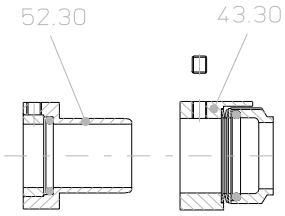

Fig. 5

11. Loosen setscrews 90.10 and remove bearing cover 36.00. Push out the shaft 21.00 with bearing 32.10 from the bearing bracket 33.00 (fig.6)

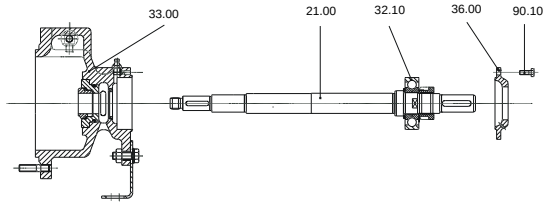

Fig.6

12. Loosen shaft nut 92.21, remove lock washer 93.11 and withdraw bearing 32.10 and backing washer 52.50 (fig. 7).

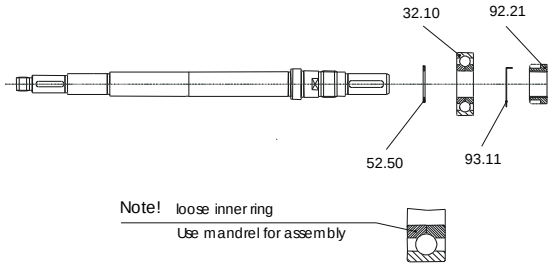

Fig. 7

13. Carefully press out the mechanical seal stationary seat from the bearing housing 33.00 (fig.8)
14. Dismantle, only if required or damaged, venting valve 74.10, grease nipple 63.60, O-Ring 41.20 and stationary seat housing 48.70

with support foot 18.30. The stationary seat housing has to be forced out. (fig.8)

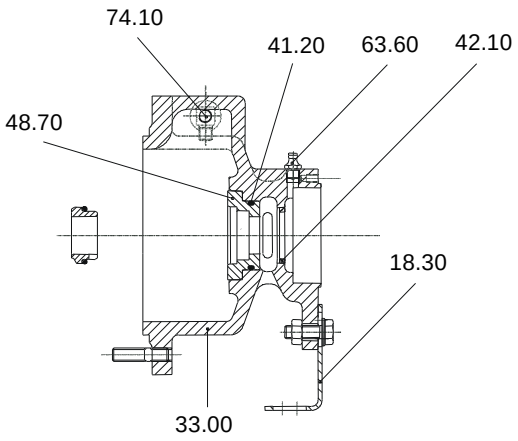

Fig. 8

7.6 Post dismantling activities

7.6.1 Hints for cleaning.

- Clean all parts.
- Clean the clearances and sealing surfaces with an appropriate liquid.

7.6.2 Points to be checked

The following components must be inspected:

1. Examine the shaft seal for damage and wear and tear.
2. Examine wear ring surfaces for damage and wear. The difference in diameter between the wear ring on the impeller and the casing parts should be between 0.3 mm and 0.5 mm.
   If the wear rings are badly worn, they must be replaced.
3. The flat gaskets and elastomers should always be replaced.
4. Check the running surface of the shaft within the sleeve bearing area. In case of damage or grooves the shaft must be replaced.
5. Replace the bearing bush in case of cracks, breaks or considerable wear.

7.7 Assembly

7.7.1 Tightening torque

The setscrews should be tightened to the following settings using a torque spanner:

Thread size	M6	M 8	M10	M12	M16
Torque NM	8.5	12	25	40	90
Torque NM housing nuts 92.00				65	130

7.7.2 Pump assembly

- <u>For executions with sizes 031125 to 031250:</u>

Check cleanliness of parts. Silicon-based grease, glycol, glycerine or water can be used as a lubricant for ‘O” rings. Grease must not be used on joint rings!

Proceed as follows:

1. Assemble bearing bracket as per fig. 8.
2. Make up shaft assembly as per fig. 7. Grease bearings with Klüber Microlube GL 261.
3. Fit the mechanical seal stationary seat into bearing bracket 33.00.
4. Assemble shaft assembly into bearing bracket 33.00 and locate through bearing cover 36.00.
5. Fit rotating element of the mechanical seal 43.30 on to shaft sleeve 52.30 and push on to shaft by means of a taper adaptor.
   Markings made on parts when dismantling will assist in ensuring that correct settings are made.
   Setscrews on the mechanical seal and shaft sleeve are to be secured with Loctite.

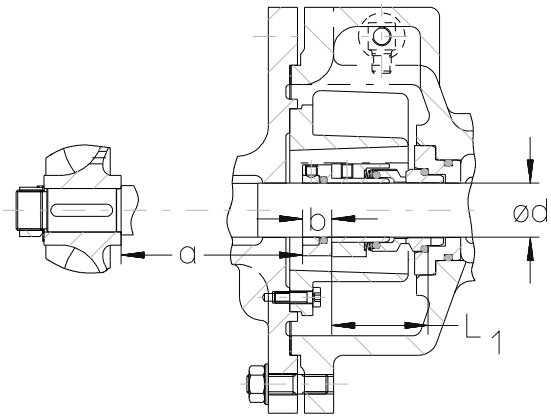

Fig. 9

If there are no markings, set to dimension a.

Seal type	Ø d	a	b	L_1
BG3	28	111	15	50

6. Secure housing for mechanical seal 44.10 on to intermediate stage 15.20. Position outer rib as indicated in fig.10.

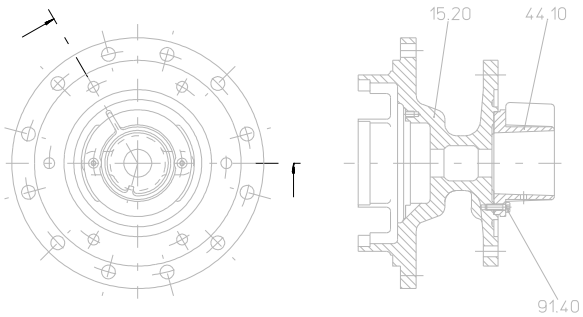

Fig. 10

7. Place joint ring 40.01 into intermediate flange 15.20 and bolt intermediate flange and bearing bracket 33.00 together.
8. Slide spacer rings 52.51 and bearing bush 52.90 on to shaft 21.00.
9. Secure bearing carrier 35.00 with Allen screws 91.41.
10. Assemble back pull-out unit as per fig.2.

ATTENTION

Do not use a hammer to bend safety tab washer. Use pliers or grippers.

11. Place joint ring 40.00 into volute casing 10.20 and assemble back pull-out unit to the volute casing. Fit regulating valve 74.10 and adaptor piece 72.10 to bearing housing. Seal by means of copper-asbestos washer 41.10.

- <u>For executions with sizes 032160 to 125250:</u>

Check cleanliness of parts. Silicon-based grease, glycol, glycerine or water can be used as a lubricant for ‘O” rings. Grease must not be used on flat gaskets rings!

Proceed as follows:

1. Assemble bearing bracket as per fig. 8.
2. Make up shaft assembly as per fig. 7. Grease bearings with Klüber Microlube GL 261.
3. Fit the mechanical seal stationary seat into bearing bracket 33.00.
4. Assemble shaft assembly into bearing bracket 33.00 and locate through bearing cover 36.00.
5. Fit rotating element of the mechanical seal 43.30 on to shaft sleeve 52.30 and push on to shaft by means of a taper adaptor.
   Markings made on parts when dismantling will assist in ensuring that correct settings are made.
   Setscrews on the mechanical seal and shaft sleeve are to be secured with Loctite.

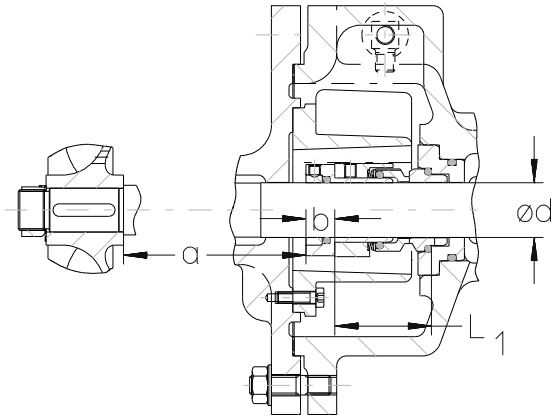

Fig. 9

If there are no markings, set to dimension a.

Seal type	Ø d	a	b	L_1
BG3	28	159,5	15	50
	38	233,5	17	52,5

6. Secure housing for mechanical seal 44.10 on to intermediate stage 15.20. Position outer rib as indicated in fig.10.

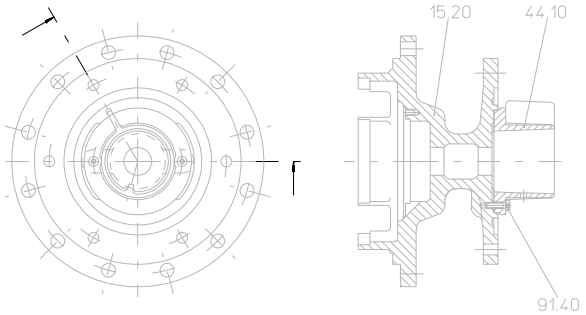

Fig. 10

7. Place seal ring 40.01 into intermediate flange 15.20 and bolt intermediate flange and bearing bracket 33.00 together.
8. Slide spacer rings 52.51 and bush 52.90 on to shaft 21.00 .
9. Place joint rings 40.00 and 40.02 into the intermediate flange and carefully place cover 16.10 over the bearing bush and press into place. Position of flush drilling 12.00 hours.
10. Insert key 94.01 into shaft 21.00 and slide on impeller. To ease assembly, smear the hub with Molykote-Paste-G. Fit lock washer 93.10 and shaft nut 92.20.

ATTENTION

Do not use a hammer to bend safety tab washer. Use pliers or grippers.

11. Place joint ring 40.00 into volute casing 10.20 and assemble back pull-out unit to the volute casing. Fit regulating valve 74.10 and adaptor piece 72.10 to bearing housing. Seal by means of copper-asbestos washer 41.10.

8. Help in case of trouble

8.1 Use of trained staff

Trouble shooting must be undertaken only by appropriately trained personnel.

8.2 Symptoms, causes and remedies

Symptom	Cause	Remedy
Output too low	- Counter pressure too high.	Check the plant for contamination. Regulate anew the operating point.
	- Pump or pipeline, resp., not completely filled.	vent and fill the pump as well as the suction or inflow line resp.
	- Suction lift too high or positive suction head too low.	Check the liquid levels, open the shut-off elements at suction side. Clean the filters and dirt traps installed at suction side.
	- Sealing gap too large because of wear.	Replace the worn pump parts.
	- Wrong sense of rotation.	Modify the motor connection.
	- Casing or suction line leaky.	Replace the casing seal. Check the flange connections.
Pump does not prime or only intermittently	- Casing, shaft seal, foot valve or suction line leaky.	Replace the casing seal. Check the shaft seal. Check the flange connections.
	- Suction lift too high or positive suction head too low.	Check the liquid levels, open the shut-off valves at suction side. Clean the filters and dirt traps installed at suction side.
	- Loose or jammed parts in the pump.	Open and clean the pump.
Pump leaks	- Casing screws not correctly tightened.	Check the tightening torque of the casing screw.
	- Mechanical seal leaky.	Check the sealing surfaces and elastomers of the mechanical seal. In case of damage, replace the mechanical seal.
	- Seals defective.	Replace the seals.
Temperature of the pump increases	- Pump or pipeline not completely filled.	Vent and fill the pump as well as the suction line or inflow line, resp.
	- Suction lift too high or positive suction head too low.	Check the liquid levels, open the shut-off valves at suction side. Clean the filters and dirt traps installed at suction side.
	- Pump is operated against closed gate.	Open the shut-off element at discharge side.
Pump runs noisily	- Pump or pipeline not completely filled.	Vent and fill the pump as well as the suction line or inflow line, resp.
	- Suction lift too high or positive suction head too low.	Check the liquid levels, open the shut-off valves at suction side. Clean the filters and dirt traps installed at suction side.
	- Pump is not properly leveled or it is distorted.	Check the pump installtation.
	- Wrong alignment between pump and motor	Check alignment
	- Foreign matters in the pump.	Dismount and clean the pump.
	- Antifriction bearing or sleeve bearing defective.	Replace parts.
Motor protection switch switches off	- Pump is not properly leveled or it is distorted.	Check the pump installation.
	- The admissible operating conditions were not complied with.	Observe the operating conditions stated in the data sheet.
	- Loose or jammed parts in the pump.	Open and clean the pump.

9. Technical Data

For technical information about the pump or pump set, which is not described in this chapter, see the specific data sheet. Note that data relating to a specific order may conflict with information provided here. In any such case, the order specific information will override data provided in the general technical documentation.

Pressure component operating limits:

Temperature range, 170 ºC to 230 ºC

Material	Temperature	Pressure	Sizes
1B	170 ºC to 200 ºC	35 bar	All
	200 ºC to 230ºC	32 bar	
2B	170 ºC to 200 ºC	35 bar	032160 to 125250
	200ºC to 230ºC	32 bar	

Shaft sealing operating limits:

Shaft sealing execution	Temperature range
BG3	-50℃ to +220℃

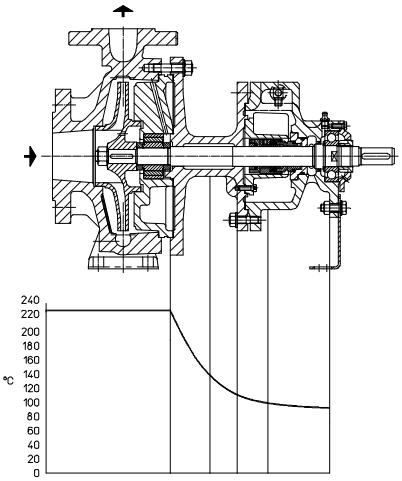

Curve of temperature decrease

ATTENTION

All indicated operating limits are not valid for all liquids which can be pumped. See technical data or delivery note.

Flange locations:

Axial suction flange, discharge flange radially upwards.

Flanges:

Material design 1B: Complies with DIN EN 1092-2 PN 40.
Material design 2B: Complies with DIN EN 1092-1 PN 40.
Flanges drilled according to ANSI 300 can be supplied.

Direction of rotation:

Clockwise seen from the drive end of the pump.

Materials of construction, and of shaft seals:

See chapter 2.4.

Vibrations:

ZEND range pumps comply with ISO 5199 Class K for pumps with a driving power of up to 15 kW and Class M with a driving power of more than 15 KW.

Noise levels:

The noise levels of the pump comply with the Directive 001/30/D - 1992 of the EUROPUMP Commission.
The following table provides approximate values:

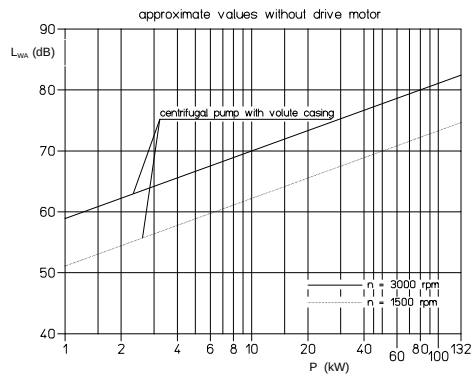

Pump without motor

Note that additional noise can be generated by:

- The driver.
- A possible misalignment of the coupling.
- Pipework (note: the larger the pipe diameter, the lower the pipe noise).

Permissible branch forces and moments:

Permissible forces and moments for 1B and 2B material executions.
According to ISO/DIN 5199 Class II (1997) Annex B

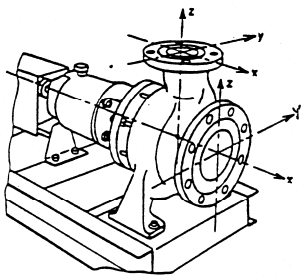

Material execution 1B:

	DN flanges	Fy (N)	Fz (N)	Fx (N)	ΣF (N)	My (Nm)	Mz (Nm)	Mx (Nm)	ΣM (Nm)
Top branch z-Axis	32	502	628	553	980	452	528	653	955
	40	502	628	553	980	452	528	653	955
	50	678	829	754	1306	502	578	703	1030
	65	1030	1256	1130	1984	578	653	804	1181
	80	1030	1256	1130	1984	578	653	804	1181
	100	1356	1683	1507	2638	628	728	879	1306
	125	2035	2512	2261	3944	879	1030	1256	1834
End branch x-Axis	50	754	678	829	1306	502	578	703	1030
	65	1130	1030	1256	1984	578	653	804	1181
	80	1130	1030	1256	1984	578	653	804	1181
	100	1507	1356	1683	2638	628	728	879	1306
	125	2261	2035	2512	3944	879	1030	1256	1834
	150	2261	2035	2512	3944	879	1030	1256	1834

Material execution 2B:

Multiply by f = 1,268; which is the relationship of E – modules between GS-C25 and GGG-40.3

Maximum permissible speeds:

Size	Max. speed rpm	Size	Max. speed rpm	Size	Max. speed rpm
031125 031160 031200 032160 032200 040160 040200 050160 050200 065160 065200 080160 080200 100160 100200	3600	031250 032250 040250 050250 065250 080250 100250 125200	3000	040315 050315 065315 080315 100315 125250	1800

Operating range:

(Continuous operation)

	Size
0,3 Q_{opt} < Q < 1,1 Q_{opt}	032160 to 080315 100315
0,5 Q_{opt} < Q < 1,1 Q_{opt}	100160 to 100250 125200 to 125250

This operating range is applicable if waterlike liquids are pumped. If liquids having distinctly different physical properties are handled, it may be necessary to narrow the permissible operating range.

See the specific performance curve for more details.

10. Connections, dimensions, sectional drawing

10.1 Connections

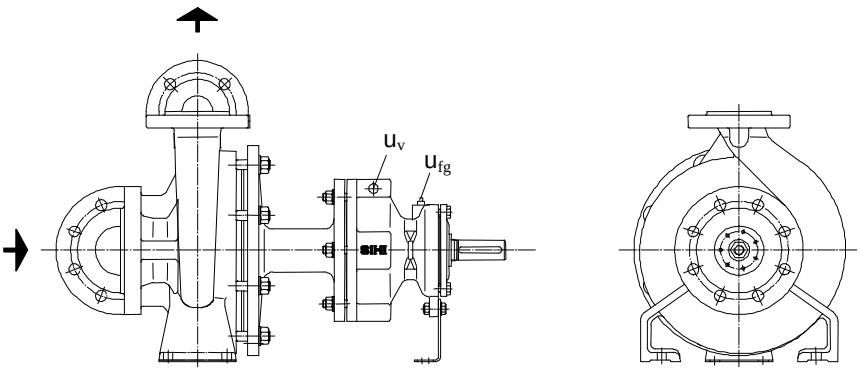

u_{fg} : Grease filling connection u_v : Vent connection

Size	u_{fg}	u_v
031125	G 1/8	G 1/8
031160		
031200		
031250		
032160		
032200		
032250		
040160		
040200		
040250		
040315		
050160		
050200		
050250		
050315		
065160		
065200		
065250		
065315		
080160		
080200		
080250		
080315		
100160		
100200		
100250		
100315		
125200		
125250		

10.2 Table of Dimensions

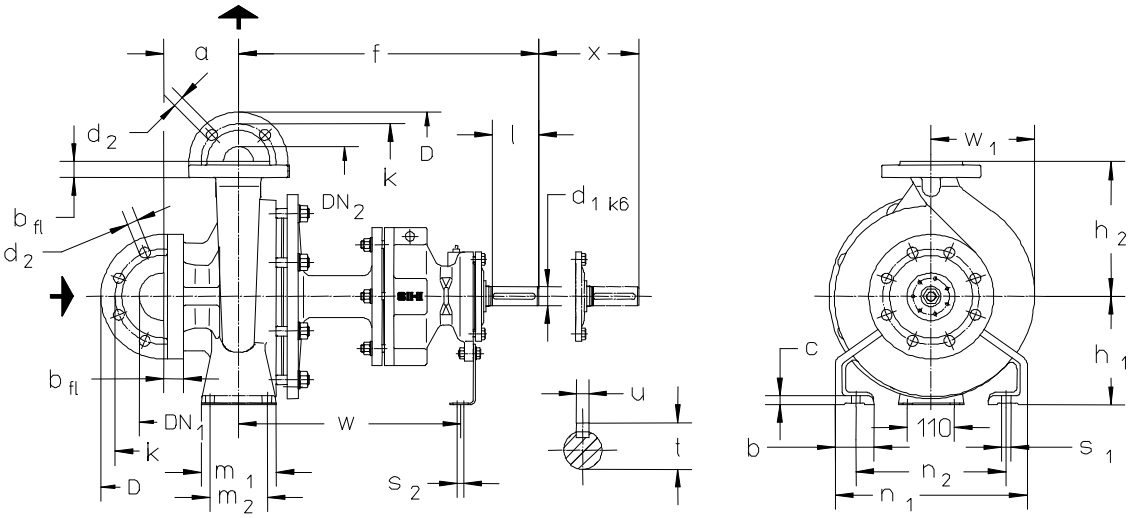

size	DN_2	DN_1	a	b	c	f	h_1	h_2	m_1	m_2	n_1	n_2	s_1*	s_2*	w	w1	x	d_1	l	t	u
031125	32	50	80	50	17	450	132	160	100	70	240	190	M12	M12	350	128	140	24	50	27	8
031160																					
031200																					
031250																					
032160						385									285	120	100				
032200							160	180								140					
032250			100	65		500	180	225	125	95	320	250			370	170		32	80	35	10
040160	40	65	80	50		385	132	160	100	70	240	190			285	125		24	50	27	8
040200			100				160	180			265	219				150					
040250				65		500	180	225	125	95	320	250			370	170		32	80	35	10
040315			125		20		200	250			345	280				205					
050160	50	80	100	50	17	385	160	180	100	70	265	212			285	135		24	50	27	8
050200								200								160					
050250			125	65		500	180	225	125	95	320	250			370	175		32	80	35	10
050315					20		225	280			345	280				215					
065160	65	100	100		17		160	200			280	212				155					
065200							180	225			320	250				175	140				
065250			125	80	20		200	250	160	120	360	280	M16			195					
065315						530	225	280			400	315				230		42	110	45	12
080160	80	125		65	17	500	180	225	125	95	320	250	M12			170		32	80	35	10
080200								250			345	280				185					
080250				80	20		225	280	160	120	400	315	M16			205					
080315						530	250	315								220		42	110	45	12
100160[1)]	100		140			500	200	280			360	280				210		32	80	35	10
100200			125																		
100250			140			530	225				400	315				215		42	110	45	12
100315							250	315								255					
125200[1)]	125	150														245					
125250								355								240					

[1)]Transnorm pump sizes, not included in DIN EN 22858.
*Slots suitable for bolts with dimensions indicated. Bolts are not included in the bare shaft pump standard scope of supply.

Flange connection according to DIN EN 1092-2 PN 40 material execution 1B									Flange connection acc. to DIN EN 1092-1 PN 40 material execution 2B							
DN_2/DN_1	32	40	50	65	80	100	125	150	32	40	50	65	80	100	125	150
D	140	150	165	185	200	235	270	300	140	150	165	185	200	235	270	300
k	100	110	125	145	160	190	220	250	100	110	125	145	160	190	220	250
b_{fl}	18	19	19	19	19	19	23,5	26	18	18	20	22	24	24	26	28
Tolerances	+4,0 -3,0								+4,5 -1,5							
d_2 x number	19x4	19x4	19x4	19x8	19x8	23x8	28x8	28x8	18x4	18x4	18x4	18x8	18x8	22x8	26x8	26x8

10.3 Parts list

When ordering spare parts give the following information: position number, the complete pump designation and the serial number, which can be found on the nameplate fixed to the pump.

Pos. Nr.	Description
10.20	Volute casing
10.91	Intermediate piece
11.30	Blind stage
15.20	Intermediate flange
16.10	Cover
17.11	Intermediate piece
18.30	Support foot
21.00*	Shaft
23.00*	Impeller
32.10*	Inclined ball bearing
33.00	Bearing bracket
35.00*	Bearing carrier
36.00	Bearing cover
40.00*	Joint
40.01*	Joint
40.02*	Joint
41.10	Joint
41.20*	O-ring
41.23*	O-ring
42.10*	Radial shaft seal ring
43.30*	Mechanical seal
44.10	Mechanical seal casing
45.80	Lantern ring
48.70*	Stationary seal ring support
50.90	Intermediate ring
52.30*	Shaft sleeve
52.50*	Backing washer
52.51*	Spacer ring
52.53*	Spacer
52.54*	Spacer
52.90*	Bearing bush
54.00*	Bush
55.00	Washer
55.01	Washer
55.02	Washer
63.60	Grease nipple
72.10	Transition piece
74.10	Vent valve
90.10	Hexagon screw
90.11	Hexagon screw

Pos. Nr.	Description
90.22	Stud
90.23	Stud
91.40	Allen head screw
91.41	Allen head screw
92.00	Hexagon nut
92.01	Hexagon nut
92.02	Hexagon nut
92.03	Hexagon nut
92.20*	Hexagon nut
92.21*	Shaft nut
93.10*	Lockwasher
93.11*	Lockwasher
94.00*	Key
94.01*	Key
94.11*	Woodruff key

* Recommended spare parts

ZEND 031125

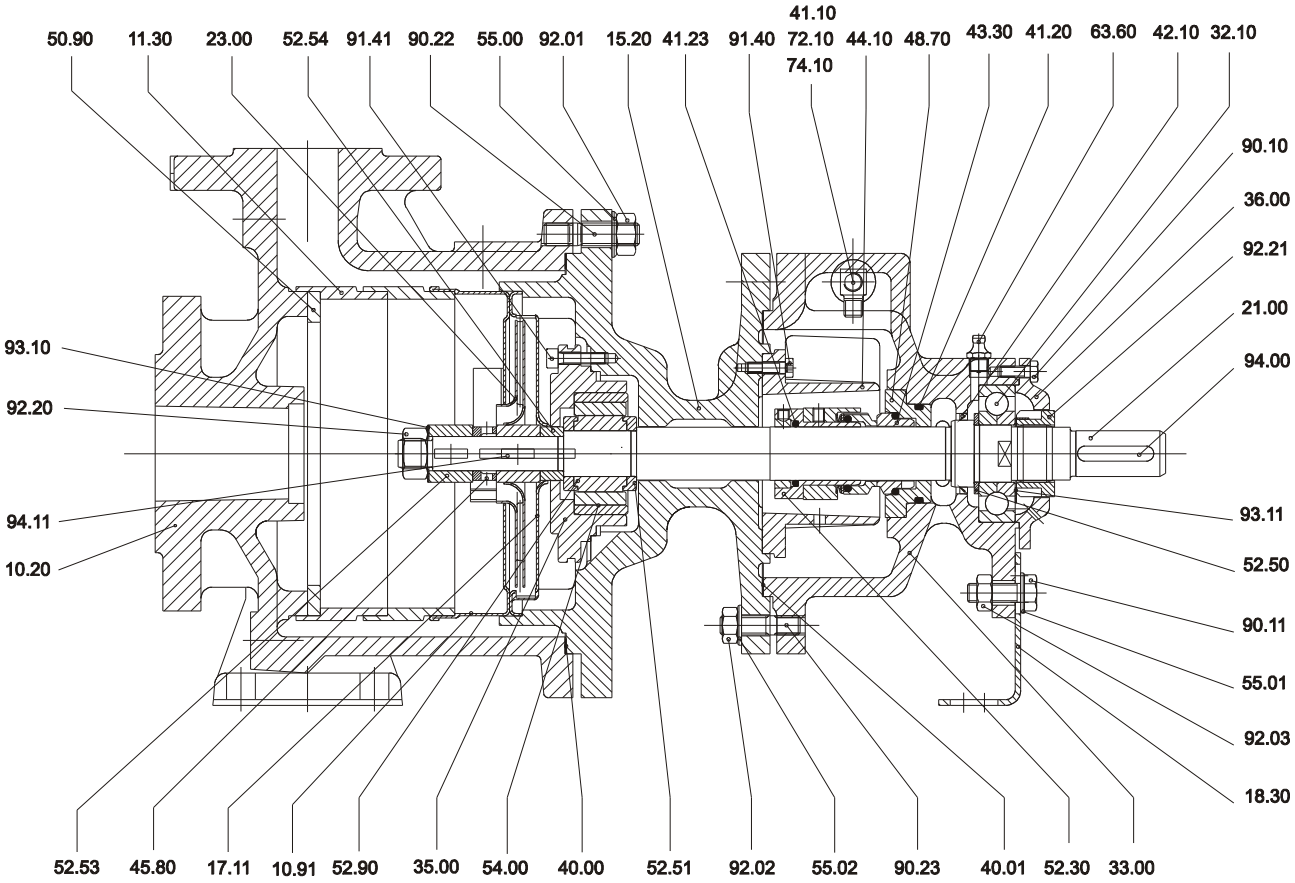
50.90
11.30
23.00
52.54
91.41
90.22
55.00
92.01
15.20
41.23
91.40
41.10
72.10
74.10
44.10
48.70
43.30
41.20
63.60
42.10
32.10
90.10
36.00
92.21
21.00
94.00
93.10
92.20
94.11
10.20
93.11
52.50
90.11
55.01
92.03
18.30
52.53
45.80
17.11
10.91
52.90
35.00
54.00
40.00
52.51
92.02
55.02
90.23
40.01
52.30
33.00

ZEND 031160

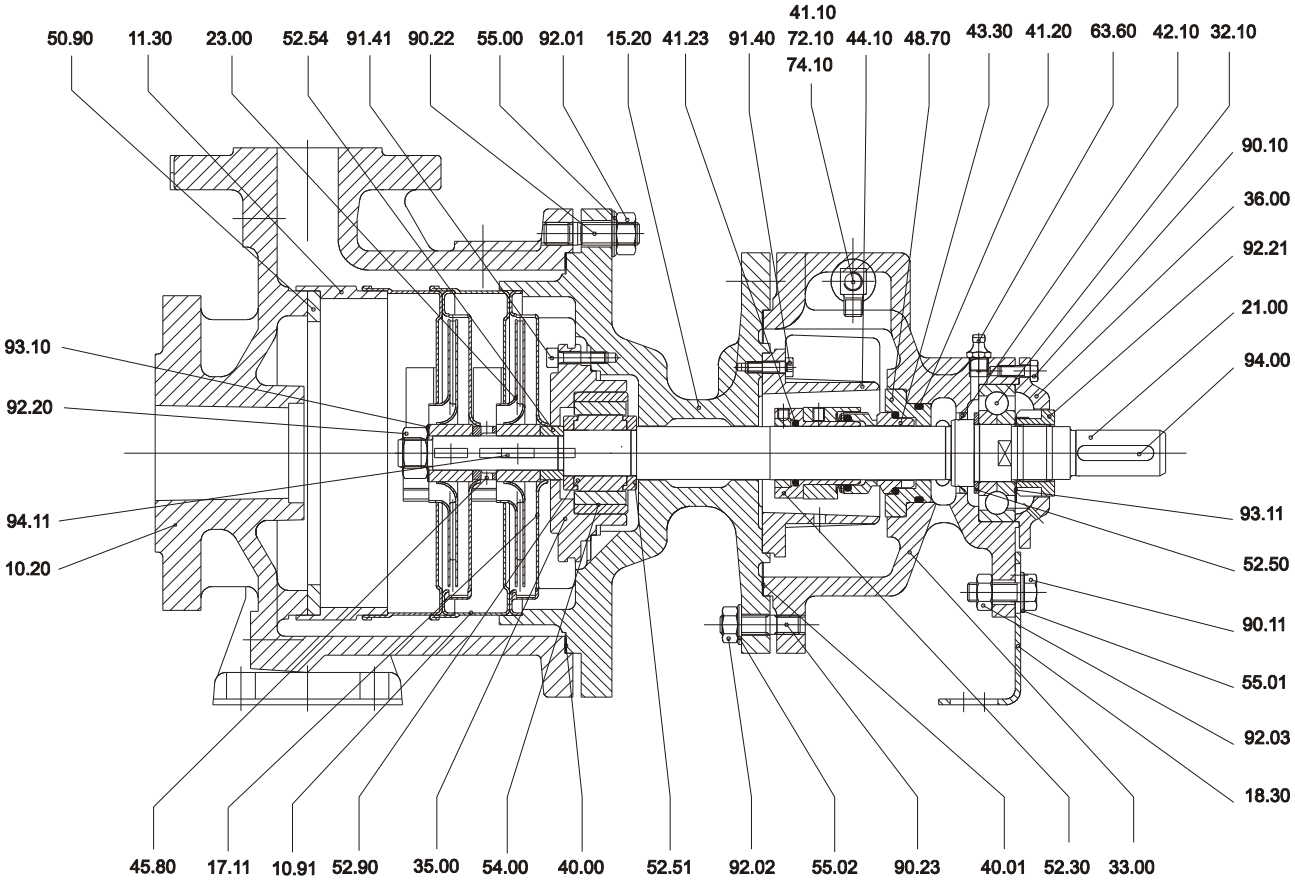
50.90
11.30
23.00
52.54
91.41
90.22
55.00
92.01
15.20
41.23
91.40
41.10
72.10
74.10
44.10
48.70
43.30
41.20
63.60
42.10
32.10
90.10
36.00
92.21
21.00
94.00
93.10
92.20
94.11
10.20
93.11
52.50
90.11
55.01
92.03
18.30
45.80
17.11
10.91
52.90
35.00
54.00
40.00
52.51
92.02
55.02
90.23
40.01
52.30
33.00

ZEND 031200

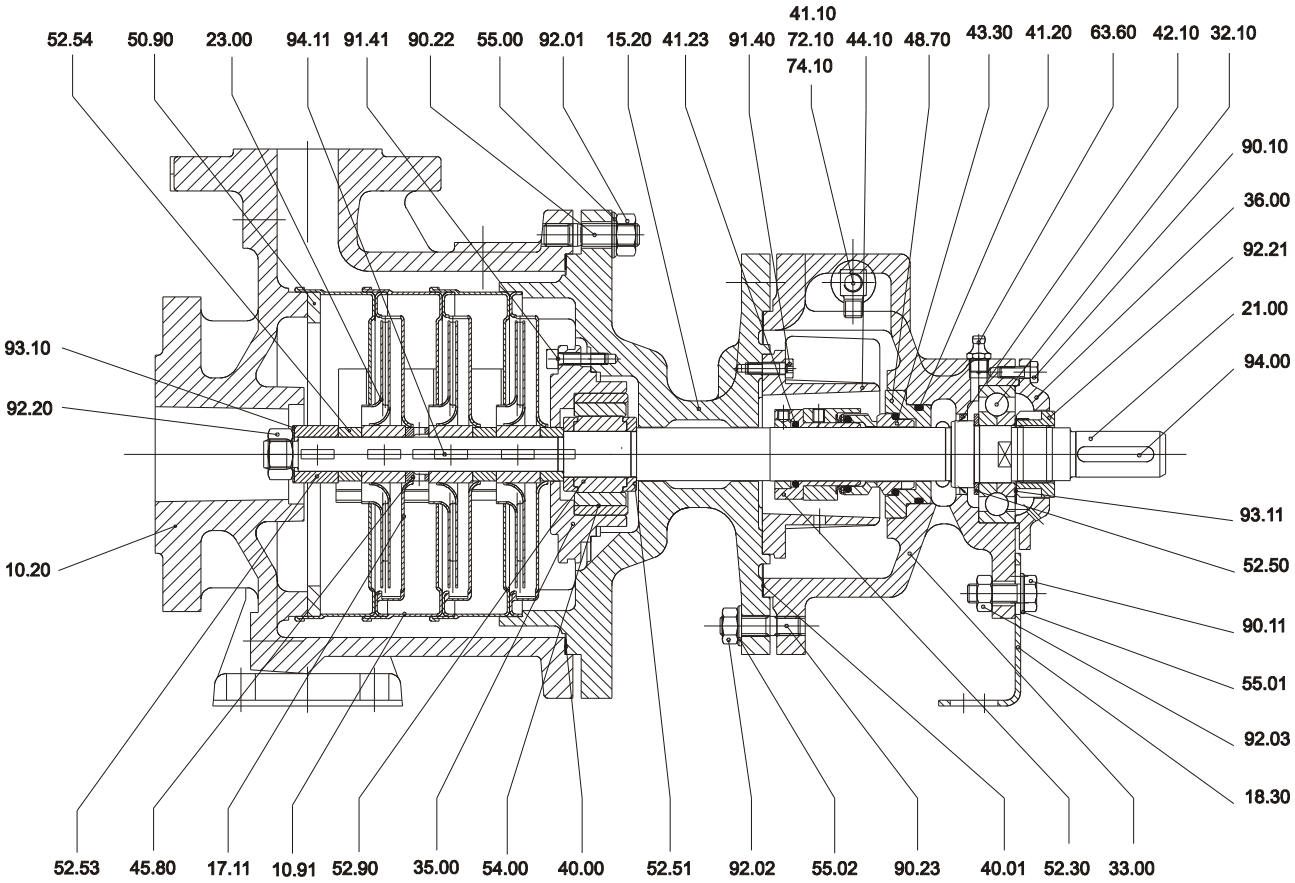
52.54
50.90
23.00
94.11
91.41
90.22
55.00
92.01
15.20
41.23
91.40
41.10
72.10
74.10
44.10
48.70
43.30
41.20
63.60
42.10
32.10
90.10
36.00
92.21
21.00
94.00
93.10
92.20
10.20
93.11
52.50
90.11
55.01
92.03
18.30
52.53
45.80
17.11
10.91
52.90
35.00
54.00
40.00
52.51
92.02
55.02
90.23
40.01
52.30
33.00

ZEND 031250

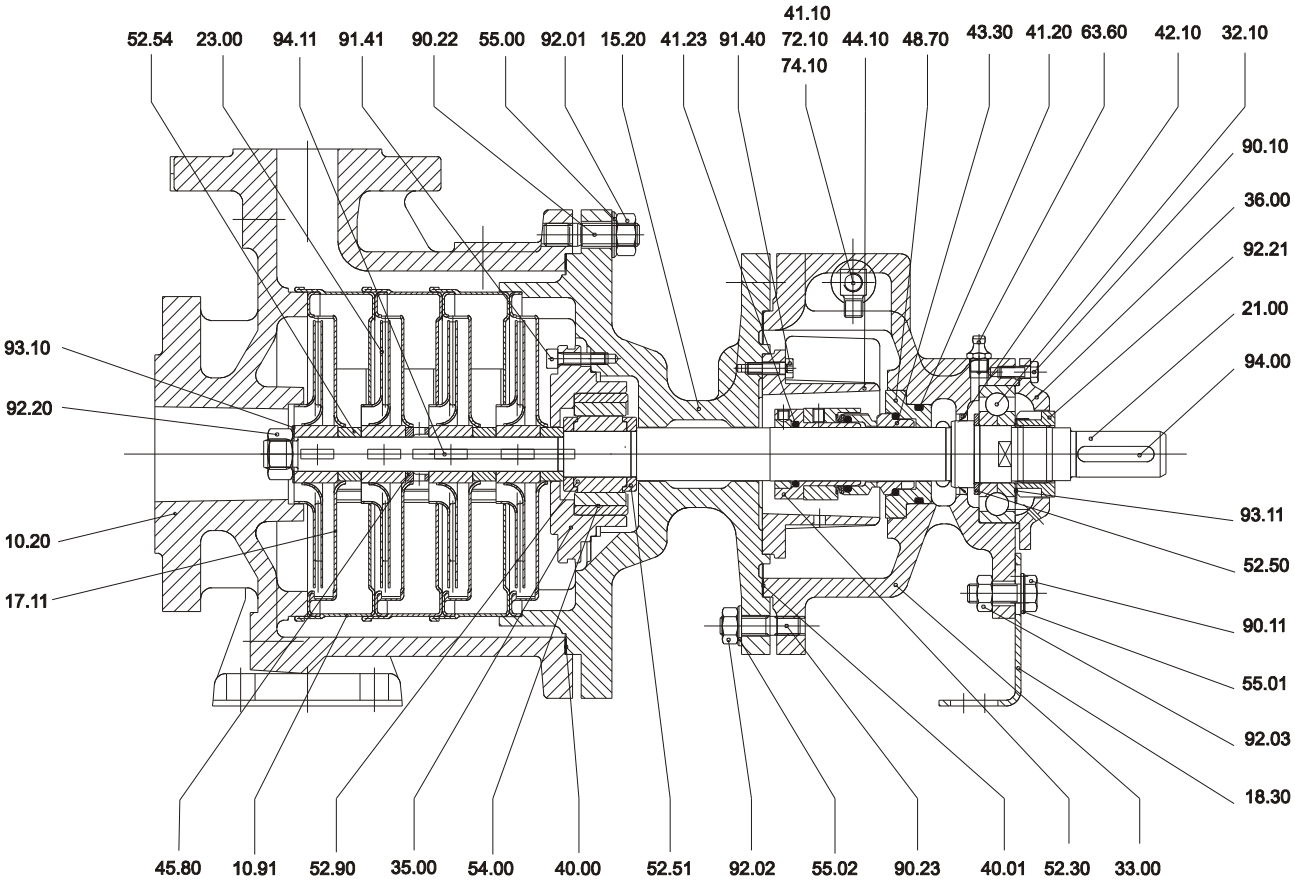
52.54
23.00
94.11
91.41
90.22
55.00
92.01
15.20
41.23
91.40
41.10
72.10
74.10
44.10
48.70
43.30
41.20
63.60
42.10
32.10
90.10
36.00
92.21
21.00
94.00
93.10
92.20
10.20
17.11
93.11
52.50
90.11
55.01
92.03
18.30
45.80
10.91
52.90
35.00
54.00
40.00
52.51
92.02
55.02
90.23
40.01
52.30
33.00

ZEND 032160 to 125250

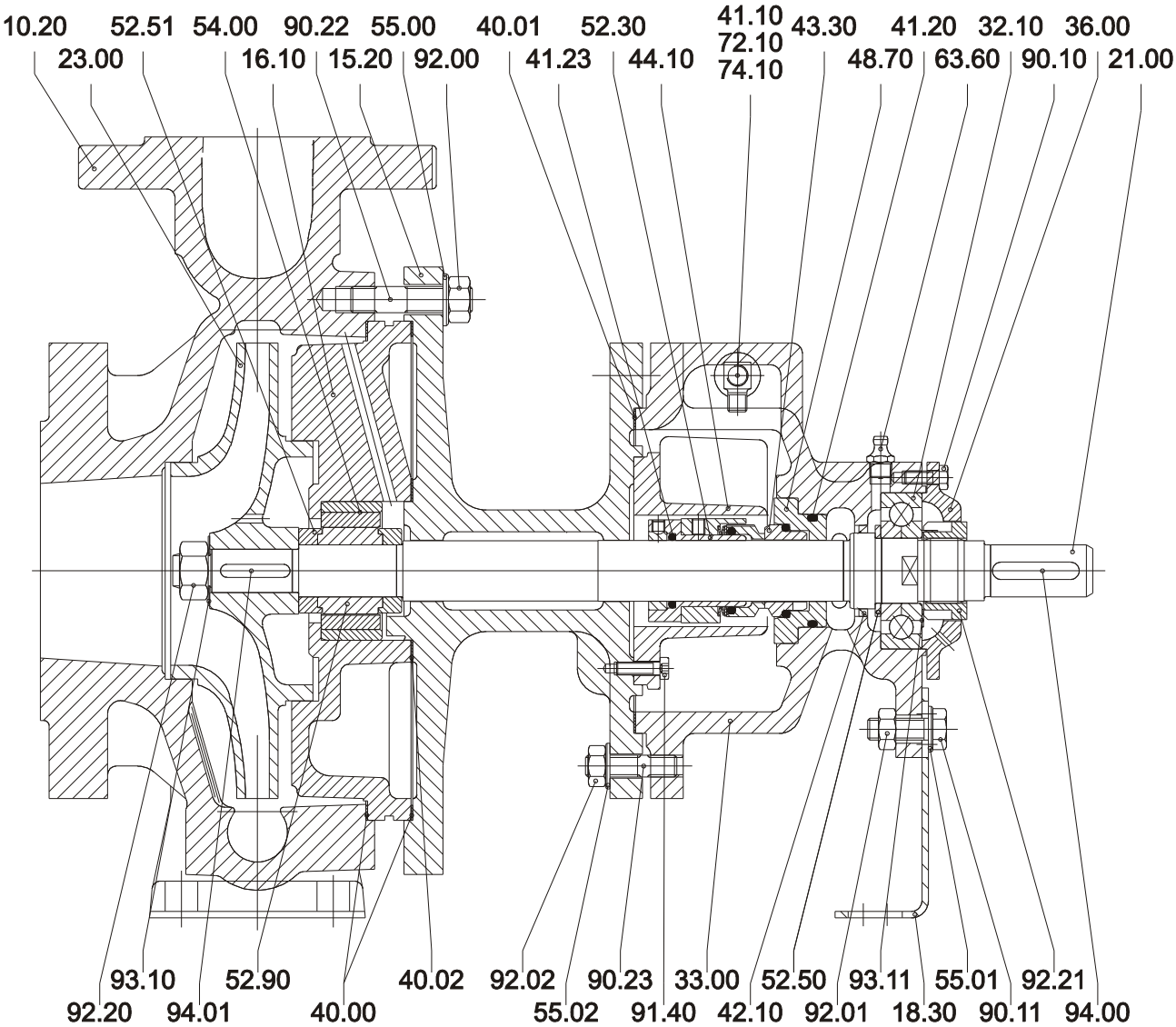

EC Declaration of Conformity

STERLING

The manufacturer:

Sterling Fluid Systems (Spain), S.A.
Vereda de los Zapateros, s/n
E-28223 Pozuelo de Alarcón

declares herewith that the product

Pump: ZEND

Serial number:

fulfils all relevant provisions of the Directive Machinery 2006/42/EC.

Furthermore the aforementioned product complies with the provisions of the EC Directives:

- Explosion Protection 94/9/EC (ATEX) as follows:

Pump: Ex II 2G c T1-T5

Harmonised standards used:

EN 809
DIN EN ISO 12100
EN 1127-1
EN 13463-1
EN 13463-5

Other technical standards and specifications used:

Person authorised to compile the technical file:

Joaquin Holgado
Sterling Fluid Systems (Spain), S.A.
Vereda de los Zapateros, s/n
E-28223 Pozuelo de Alarcón

Place, date:

Person empowered to draw up this declaration:

Product Line Manager	Operation Manager
J.A.Cobo	Martin Boelter

Supplementary operating instructions in accordance to EC directive 94/9/CE (ATEX) for the use in potentially explosive atmospheres of the following pumps types, manufactured by Sterling Fluid Systems (Spain), S.A. type:

ZLN, ZLK and ZLI (Industrial pumps)
ULN (Self Priming Pumps)
ZTN, ZTK and ZTI (Thermal Oil Pumps)
ZHN, ZDN, ZEN and ZLI (Hot Water Pumps)

These supplementary operating instructions give only general instructions for the use of pumps in conditions that need explosion protection. The operating instructions of the specific pump must be taken into consideration as well.

Contents Page

1 General Objective

Pumping systems can be operated in hazardous areas. It is the obligation of the operator to define the zone and to select the pump with the correct category for this zone.
The pump installation and operation must take into account the Operating Instructions that are described in these supplementary operating instructions. They contain important information for safe and reliable pump operation in hazardous areas. This information plus all information given for all components of the system (e.g. the operating instructions for the pump) are of vital importance to avoid risks.
These supplementary operating instructions do not take into account national or local regulations; the operator must ensure that such regulations are strictly observed by all, including the personnel in charge of the installation.
For any further information or instructions exceeding the scope of this manual or in case of damage, please contact Sterling Fluid Systems nearest customer service.

2 Safety issues

These supplementary operating instructions contain fundamental information concerning all actions with pumping systems, when operated in hazardous areas like: installation, inspection, operation, monitoring and maintenance. Therefore these and all other instructions related to safety must be known and available with easy access to all personnel involved in the above stated actions.
Not only must the general safety instructions established in this chapter on “Safety issues” be complied with, but also the safety instructions outlined under specific headings as well as the safety instructions contained in the specific operating manual of the specific pump.

2.1 Identification of safety symbols in these instructions
In these supplementary operating instructions, the safety instructions related to explosion protection are marked with:

The sign

is used to highlight safety instructions where non-compliance may pose a damage to the pump and its functions.

2.2 Compliance with regulations
It is imperative to comply with the safety instructions contained in these supplementary operating instructions, the operating instructions of the pump type concerned, the relevant national and international explosion protection regulations, health and safety regulations and the operator’s own internal work, operation and safety regulations.
Ex symbol relates to additional requirements, which must be complied with when the pump is operated in hazardous areas.

In addition the following must be observed:
If pumps / units are located in hazardous areas, it is imperative to make sure that the correct category of pump and equipment is selected and that unauthorised modes of operation are prevented. Non-compliance may result in first: increased risk of explosion and second: the specified temperature limits might be exceeded.

Non-compliance with these safety instructions may also result in the loss of any rights to claim damages.
Non-compliance may also result in hazards to persons by explosion.

2.3 Qualification and training of personnel
The personnel responsible for or involved in the installation, the operation, maintenance and inspection of the pump and the unit must be adequately qualified to carry out these works in hazardous areas.
The scope of responsibility and supervision of the personnel must be exactly defined by plant management. If the staff does not have the necessary knowledge, they must be trained and instructed. The pump manufacturer or supplier on behalf of the plant management may perform this task. Moreover, plant management must ensure that the contents of the operation instructions are fully understood by plant operators and other relevant personnel such as maintenance staff.

2.4 Safety instructions for maintenance, inspection and installation work
The operator is responsible to assure that all installation work, inspection, operation and maintenance must be carried out by authorized and qualified specialist personnel, which is thoroughly familiarized with the pump operating instructions and these supplementary operating instructions.
Ex If necessary, additional explosion protection regulations must be considered.

3 Instructions concerning pump and accesories

3.1 General
Pumps and accessories for installations in hazardous areas must comply with the relevant category of mechanical and electrical equipment.

Some details are pointed out below:

3.2 Pump pressure containment components

Ex For handling inflammable fluids, the pump pressure containment components must be made of ductile material.

3.3 Coupling and coupling guard
The accident prevention regulations require, that pump drive must not be operated without a coupling guard. If a customer specifically decides, not to include a coupling guard in our delivery, then the operator must provide such coupling guard himself. The coupling must be selected and sized in accordance with the instructions of the coupling manufacturer. It is important to make sure that the materials selected for coupling and coupling guard are non-sparking in the event of mechanical contact. Sterling Fluid Systems scope of supply meets this requirement.
Ex In hazardous areas coupling guards must be of non-sparking material, whereby the coupling material must be considered.

3.4 Belt drive
Belts must include some electrically conductive material.

4 Instructions concerning installation and start-up of pump sets

In addition to the normal installation instructions, the specific criteria for explosion protection are listed below:

4.1 Coupling
Ex The coupling must be installed, started-up and operated in accordance with the operating instructions of the coupling manufacturer. Misalignment of the coupling may result in inadmissible temperatures at the coupling and motor bearings. It has to be ensured that the coupling halves are correctly aligned at all times.

4.2 Connection to power supply
Ex Only a properly trained electrician must effect connection to the power supply. The available main voltage must be checked against the data on the motor rating plate and an appropriate start-up method must be selected.

Sterling Fluid Systems strongly recommends using a motor protection device (motor protection switch)

In hazardous areas, compliance with national and local regulations form and additional requirement for electrical connections.

4.3 Earthing

To eliminate risks due to electrostatic charging, pump set must be earthed directly or through an earthing line.

4.4 Belt drive

Belt-driven pump sets must always be earthed. The condition of the belts must be checked regularly.

5 Instructions concerning operation and maintenance

5.1 Unauthorized modes of operation

The warranty related to the operating reliability and safety of the unit supplied is only valid if the equipment is used in accordance to its designated use as described in the following sections of this supplementary operating manual and the specific pump operating manual. The limits stated in the data sheet must not be exceeded under any circumstances.

Any operation of the pump outside the permissible operating range and any unauthorized modes of operation may result in the specific temperature limits being exceeded (see section 5.8).

5.2 Explosion protection

If pumps / units are installed in hazardous areas where compliance with EC directive 94/9/EC is required, the measures and instructions given in the following sections 5.3 to 5.9 must be carried out with no excuse, to ensure explosion protection.

5.3 Pump filled and vented

Especially dry running of a pump results in friction and non-allowed temperature rise. Therefore precautions have to be taken to prevent dry running.

It is necessary that the system of suction and discharge lines and thus the wetted pump parts including seal chamber and auxiliary systems are completely filled with fluid to be handled at all time during pump operation, so that and explosive atmosphere is prevented.

If the operator cannot warrant this condition, appropriate monitoring devices must be used.
Improper installation (e.g. vertical installation) may impair the self-venting properties of the seal chamber, so that gas bubbles may be collected in the pump and cause the mechanical seal to run dry.

High negative pressure on the suction side (e.g. due to clogged suction-side strainers or low system pressure) may result in air intake at the shaft seal forming gas bubbles in the pump. This may also cause the mechanical seal to run dry. Suitable monitoring facilities shall be installed, if necessary.

For design inherent reasons, however, it is not always possible to exclude the existence of a certain residual volume not filled with liquid after the pump has been filled prior to start of operation. However, once the motor is started up the pumping effect will immediately fill this volume with pumped fluid.

It is imperative to make sure that seal chambers and auxiliary seal systems are properly vented from air and filled with liquid.

5.4 Marking

The Ex marking on the pump only refers to the pump part, i.e. the coupling and motor must be considered separately. The coupling must have an EC Declaration of Conformity and the EC marking. The driver must be treated separately

Example of marking on the pump part: CE Ex II 2 G c T1 - T5

The safety instructions published in section 5.8 must be complied with.

5.5 Fluid pumped

Abrasive particles in the fluid handled may erode the casing walls to such and extent that fluid may escape. When handling inflammable media, it has to be ensured that the fluid does not contain any abrasive particles, or that the pump is regularly checked with respect to erosion.

5.6 Checking of direction of rotation (see also pump specific operating manual)

If the explosion hazard also exists during the installation phase, the direction of rotation must never be checked by starting up the unfilled pump unit, even for a short period, to prevent temperature increases resulting form contact between rotating and stationary components. If it is possible to fill the pump, the direction of rotation must be checked with the pump / motor coupling removed.

5.7 Pump operating mode

Make sure that the pump is always started up with the suction-side shut-off valve fully open and the discharge-side shut-off valve slightly open. However, the pump can also be started up against a closed swing check valve. Only after the pump has reached full rotational speed shall the discharge-side shut-off valve be adjusted to comply with the duty point.

Pump operation with closed shut-off valves in the suction and / or discharge pipes is not permitted. In this case, there is a risk of the pump casing reaching a high surface temperature after a very short time, due to a rapid temperature rise in the pumped fluid inside the pump. Additionally, the resulting rapid pressure build-up inside the pump may cause excessive stresses on the pump materials and even cause it to burst.
The minimum flows indicated in the relevant pump operating manuals refer to water and water-like liquids. Longer operation periods with these liquids and at the flow rates indicated will not cause and additional increase in the temperature on the pump surface. However, if the physical properties of the fluids handled are different from water, it is essential to check if and additional heat build-up may occur and if the minimum flow rate must therefore be increased.
The calculation formula below can be used to check if an additional heat build-up may lead to a dangerous temperature increase at the pump surface.

$T_o = T_f + \Delta\vartheta$

$\Delta\vartheta = ((g * H) / (c * \eta))*(1 - \eta)$

c	Specific heat of liquid [J / kg K]
g	Acceleration due to gravity [m2/s]
H	Pump head [m]
T_f	Temperature of pumped fluid [º C]
T_o	Temperature of casing surface [º C]
η	Pump efficiency [-]
$\Delta\vartheta$	Temperature difference [º C]

5.8 Temperature limits

In normal pump operation, the highest temperature is to be expected on the surface of the pump casing, at the shaft seal, at the bearing areas and at the pump shaft end in close coupled executions.
Unless the pump is equipped with an additional heating facility, the surface temperature at the pump casing will correspond to the temperature of the fluid handled, assuming that the pump surface is freely exposed to the atmosphere.

In any case, responsibility for compliance with the specified fluid temperature (operating temperature) lies with the plan operator. The maximum permissible fluid temperature depends on the temperature class to be complied with.
The following limits for the maximum permissible temperature must be observed for the individual temperature classes as per EN 13463-1 given below (temperature increase in the shaft seal area, if any, has been taken into consideration):

Temperature class as per EN 13463-1:	Permissible surface temperature	Max. Permissible fluid temperature for compliance with temperature class
T5	100 º C	80 º C
T4	135 º C	115 º C
T3	200 º C	180 º C
T2	300 º C	280 º C
T1	450 º C	Temperature limit of the pump

The permissible operating temperature of the pump in question is indicated in the technical data. If the pump is to be operated at a higher temperature, the technical data are missing or if the pump is part of a pool of pumps, the maximum permissible operating temperature must be requested from the pump manufacturer.

Because of the very close contact between pumps and motors in close coupled design (ZLK and ZLI Industrial pumps; ZTK and ZTI, Thermal Oil Pumps; and ZLI, Hot Water Pumps), there is a thermal influence between pump and motor.
Especially for motors with protection type EExe (increased safety) the possibility that the declaration of conformity losses its validity exits, as for the EC type examination an ambient temperature of 40 ºC is taken as a basis. This admissible ambient temperature could be exceeded in the area of the motor flange when pumping hot liquids.
In the event of fluid temperature above 80 ºC, the temperature category of the unit / set is determined by the pump not by the motor.

The motor is usually rated for continuous operation at the data indicated in the technical data. Frequent motor start-ups may result in increased surface temperature at the motor. Contact motor manufacturer, if necessary.
Based on ambient temperature of max. 40 ºC and assuming that the pump unit is properly serviced and operated and that the surfaces in the bearing area are freely exposed to the atmosphere, compliance with temperature class T4 is warranted for surfaces in the area of rolling element bearings.
If temperature class T5 (100 ºC) and T6 (85 ºC) have to be compliance with, special measures may have to be taken with regard to bearing temperature. In such cases and if ambient temperatures are higher, contact the manufacturer.
Operator's errors or malfunctions may result in substantially higher temperatures. Please refer to section 5.1 in this context.

Mechanical seals may exceed the specified temperature limits if run dry. Dry running may not only result from an inadequately filled seal chamber, but also from excessive gas content in the fluid pumped.
Pump operation outside the specified operating range may also result in dry running. Shaft seals shall be regularly checked for leakage.

The above stated and also stated in other paragraphs related to the mechanical seal, is also applicable for any shaft sealing execution (i.e. packing rings, lip seal rings,…)

It has to be verified, that V-rings are properly fitted to the shaft. Only proper contact should exist between the sealing lip and the shaft.

5.9 Maintenance

Only a pump set, which is properly operated and maintained in perfect technical conditions, will give safe and reliable operation. This also applies to the reliable function of the rolling element bearings whose actual lifetime largely depends on the operating mode and operating conditions.
Regular checks of the lubricant and the running noises will prevent the risk of excessive temperatures as a result of bearings running hot or defective bearing seals.
The correct function of the shat seal must be checked regularly.
Any auxiliary systems installed must be monitored, if necessary, to make sure they function correctly.
Static sealing elements shall be regularly checked for leakage.
The coupling guard and any other guards of fast rotating components must be regularly checked for deformation and sufficient distance from rotating elements.
Regularly verify the correct position and the status of plastic components exposed to the atmosphere.
It is strongly recommended to draw up a maintenance schedule, which includes the above-mentioned points.

In case of repair, only original Sterling Fluid Systems spare parts must be used, which comply with the corresponding EC Directives.

6 Additional instructions for couplings in ATEX pump sets

The following instructions for couplings need especially to be followed for pump sets which are manufactured in conformity with Directive 94/9/EC for operations as category 2G equipment in hazardous areas.

6.1 Limitations

Only the coupling type BDS and HDS are released for pump sets in conformity with 94/9/EC.

These couplings are designed to be operated according to the following parameters:
- Max. 25 starts per hour.
- Daily operating cycle up to 24 h.
- Operation within the specified alignment.
- Temperature range -30ºC a +80ºC in the immediate vicinity of the coupling.

6.2 Storage

If coupling parts are stored as spare parts, the storage area must be dry and free from dust. The flexible elements must not be stored with chemicals, solvents, motor fuels, acids, etc… Furthermore they should be protected against light, in particular sunlight and bright artificial light with high ultraviolet content.

The storage area must not contain any ozone-generating equipment, e.g. fluorescent light sources, mercury vapour lamps, high voltage electrical equipment. Damp storage areas are unsuitable. Ensure that no condensation occurs. The most favourable atmospheric humidity is below 65%.

6.3 Installation

Type B and H couplings shall never be operated in pump sets category 2G.

The flexible elements are delivered in different materials and are then differently coloured or marked with stripes in different colours. Only elements of one type must be used in one coupling.

When assembling a pump set with a coupling, the fits of the bores and shafts must be checked. See table 6.C.1

Table 6.C.1 Tolerances for coupling fit

Fit	Nominal diamenter	Shaft tolerance	Coupling bore tolerante
Shaft tolerance according to DIN 748/1	≤ 50 mm	k6	H7
	> 50 mm	m6	

Failure to observe these instructions may result in breakage of the coupling. Danger from flying fragments! The coupling then becomes and explosion hazard.

6.4 Mounting coupling parts

Before beginning installation, shaft ends and coupling part must be carefully cleaned. Before cleaning the coupling parts with solvent the flexible elements must be removed.
If necessary, heating the coupling parts (to max 150 ºC) will facilitate fitting. With temperatures over 80 ºC the flexible elements must be removed form the coupling parts before heating.

Coupling parts must be fitted with the aid of suitable equipment to avoid damaging the shaft bearings through axial joining forces. Always use suitable lifting equipment.
Shaft ends must not project from the inner sides of the hub. Axial security is effected by means of the set screw.

Tighten the set screws with a tightening torque in accordance with the table 6.C.3.

Failure to observe these instructions may result in breakage of the coupling. Danger from flying fragments! The coupling then becomes and explosion hazard.

After fitting the coupling parts onto the shafts the flexible elements, if previously removed must be fitted. Previously heated coupling parts must make cooled down again to a temperature below +80 ºC. It must be ensured that the flexible elements are of identical size and colour or have identical marking.

Move together the pump set components to be coupled.

Danger of squeezing!

6.5 Alignment

Couplings connect shaft ends of the driver and the pump. The alignment of shaft ends needs to be adjusted within the following tolerances.

The errors of alignment are differentiated into:

- Axial misalignment: the allowable difference between maximum and minimum axial gap S between maximum and minimum axial gap S between the two coupling halves is given Table 6.C.2.
- Angular misalignment: this can usefully be measured as the difference in the gap dimensions $\Delta S = S_{max} - S_{min}$. The allowable values are given in Table 6.C.2, depending on coupling size and speed.

- Radial misalignment is the radial offset between the shaft centres. The allowable values are the same ΔS values like for the angular misalignment given in Table 6.C.2.

The method to adjust the alignment is:

- First correct the angular misalignment.
- Then correct the axial gap.
- Then correct the radial misalignment.

The useful tools are a feeler gauge and a ruler as shown in figure 6.C.2.

Table 6.C.2 Alignment dimensions

Coup. type BDS	Axial gap S mm	Angular and radial misalignment ΔS_{max}. in mm at speed				
		750 1/min	1000 1/min	1500 1/min	2000 1/min	3000 1/min
76	2 – 4	0,25	0,2	0,2	0,15	0,15
88	2 – 4	0,25	0,2	0,2	0,15	0,15
103	2 – 4	0,25	0,25	0,2	0,2	0,15
118	2 – 4	0,3	0,25	0,2	0,2	0,15
135	2 – 4	0,3	0,25	0,25	0,2	0,15
152	2 – 4	0,35	0,3	0,25	0,2	0,2
172	2 – 6	0,4	0,35	0,3	0,25	0,2
194	2 – 6	0,4	0,35	0,3	0,25	0,2
218	2 – 6	0,45	0,4	0,3	0,3	0,2
245	2 – 6	0,5	0,4	0,35	0,3	0,25

6.6 Fixing the coupling on the shaft

For fixing the coupling parts on the shaft there are set screws, which need to be locked with the following torque depending on coupling size:

Table 6.C.3 Torque for set screws

Size	76	88	103	118	135	152
Torque Nm	4	4	4	4	8	8
Size	172	194	218	245		
Torque Nm	15	25	25	25		

6.7 Operation

If any irregularities are registered during operation (vibrations of noise) the pump set is to be switched off immediately. Determine the cause of the fault using the fault list in Chapter 8. This list contains possible faults, their reasons and successful actions.

If the analysis is not possible then contact the Sterling Service.

6.8 Maintenance

Regular control of the torsional backlash is necessary to prevent.

The torsional backlash has to be measured in the following way: One coupling part is rotated against the other with no torque to a stop. Then this position of the two coupling halves is marked (se figure 6.C.3). Then the coupling parts are rotated into the other direction as far as possible without torque. The distance between both marks is the backlash measure ΔS_b. The maximum values for this measure are given in Table 6.C.4 by coupling size. If this measure is exceeded, then the flexible elements need to be exchanged.

The flexible elements must be replaced in sets (all elements of one coupling at once, independent of the individual wear). Only identically marked flexible elements must be used. Only spare parts from the original equipment manufacturer are allowed for replacement

Table 6.C.4 Torsional backlash measure

Size	76	88	103	118	135	152	172
ΔS_b mm	7,0	5,0	7,0	9,0	10,5	11,5	9,0
Size	194	218	245				
ΔS_b mm	8,0	7,0	6,5				

6.9 Figures:

Figure 6.C.1 Measures for checking alignment

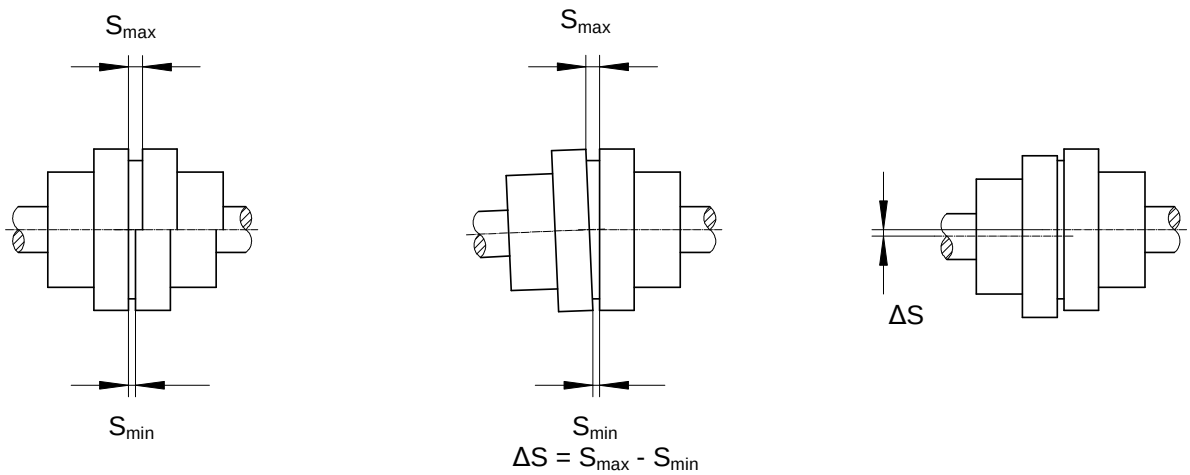

Figure 6.C.2 Checking of alignment

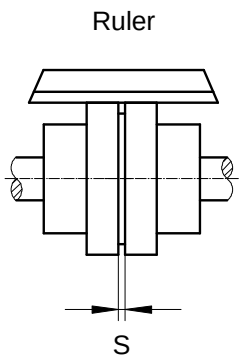

Figure 6.C.3 Measurement of torsional backlash